Interface Region Imaging Spectrograph

IRIS

A101-RQ-08-0159, Rev B

Date: May 14, 2012

Total Number of Pages: 38

IRIS Mission Definition Requirements Agreement

Level 2 Requirements

CDRL 10

Prepared for: NASA - Goddard Space Flight Center
Greenbelt, MD

Under Contract: NNG09FA40C

Prepared by: Lockheed Martin Space Systems Company
Advanced Technology Center – CAGE 65113
Lockheed Martin Solar & Astrophysics Laboratory (LMSAL)
3251 Hanover Street, Palo Alto, CA 94304-1191

LOCKHEED MARTIN

Note: A hard copy of this document may not be the document currently in effect. The current version is always the version on the Lockheed Martin Intranet.

U.S. Export Controlled Information: Information included herein is controlled under the International Traffic in Arms Regulations (ITAR) by the U.S. Department of State. Transfer of this information to a Foreign Person or foreign entity requires an export license by the U.S. State Department or an ITAR exemption to the license requirement prior to the export or transfer.

Prepared/Approved by: _____ Date: 5/29/2012
C. Hoffmann, IRIS Mission Chief Systems Engineer, LMSAL

Approved by: _____ Date: June 21, 2012
B. Allard, Spacecraft Systems Engineer, LMATC

Approved by: _____ Date: 5/29/12
J. Eder, Spacecraft Manager, LMS&ES

Approved by: _____ Date: 5/29/12
R. Hunt, Mission Operations Manager, NASA/Ames

Approved by: _____ Date: 21 June 2012
R. Bush, JSOC-SDP Manager, LSJU

Approved by: _____ Date: 22 June 2012
N. Hurlburt, JSOC-IOC Lead, LMSAL

Approved by: _____ Date: 5/29/12
J. Lemen, Project Scientist, LMSAL

Approved by: _____ Date: 5/29/12
J. Marmie, Assistant Project Manager, NASA/Ames

Approved by: _____ Date: 6/4/12
Gary Kushner, Project Manager, LMSAL

Approved by: _____ Date: 6/26/2012
Alan M. Title, Principal Investigator, LMSAL

Approved by: _____ Date: 6-21-12
Mark Ridley, Mission Assurance Manager, LMSAL

Revision History

Revision	Date	Description of Change
V01	16-Dec-2008	Draft for CSR
V02	25-Mar-2009	Draft for CSR Site Visit
V03	26-Jan-2010	Draft for SRR
V04	04-May-2010	MDRA_7.4.3 now reads "typical daily command volume will be 10-20 kbytes," formerly "2 kbytes" MDRA_4.3 Removed reference to 1000 pixels. Will be a level 3 requirement MDRA_4.5 Relaxed spectrograph wavelength scale from 0.5 km/sec to 1.0 km/sec. Relaxed to ease instrument design with expectation that more calibrations will be made on-orbit to compensate; no loss in science capability MDRA_4.7 Changed "should" to "shall" MDRA_4.12.3 Removed requirements for S-band Backup Mode per A. Title MDRA_4.12.3 Removed reference to science data but kept link margin requirement for Bit Error Rate of ≤ 10-7. MDRA_5.10 Reduced bus voltage range from 28±6V to 28±4V based on characteristics of Li-Ion battery MDRA_5.10.6 Changed voltage transient requirement from -1 to 40 for 500 ms to 0 to 40 for 10 ms. This is to be consistent with COTS HW selected. The EGSE will provide this environment when powering up/down. MDRA_5.6 Additional design requirements for orbital debris are documented in A101-RP-10-0765, Design for Demise Guidelines MDRA_7.3 Ranging is no longer a NEN requirement; tracking will be performed with coherent mode RF Doppler data MDRA_5.7 Removed ambiguous "or decisions made within the instrument computer." MDRA_5.7 Changed 40" slew time in 5 sec to 60" in 10 sec to 10 sec to match current est. performance; this is no impact to science. MDRA_5.7.9 Roll angle of ±90 degrees shall now be held indefinitely rather than 5 hours. MDRA_5.12 Changed Comm System requirements to reflect BPSK modulation on S-band up/downlink and TDRSS link margin parameters MDRA_5.12 Added coherent mode of operation requirement for the transponder

		MDRA_5.12 Rephrased many requirements in this section. MDRA_XXX Corrected mis-numbering throughout document MDRA_5.11 & 5.12 Added C&DH and transponder interface requirements to mitigate command receiver lockout MDRA_7.5.2 Achieving data volume when rolled is now a goal MDRA_7.9.7 Added response time requirement for the Ops Team to respond to critical anomalies. Note: Numbering for changes above have been truncated to the section level to account for many re-numbering changes in this revision
–	13 May 2010	Initial Release
A	6 Nov 2010	MDRA_5.1.2 – deleted requirement for the Gegenschein Imager (CCB001) MDRA_5.1.3 Updated bus layout per CCB001 MDRA_5.8.2 Removed accommodation for Gegenschein Imager (CCB001) MDRA_5.11.11 & 5.11.20 Changed stored tlm requirement to come via S or X-band system per BRE stated capability (SRR version of MDRA required this) MDRA_5.12.1, 5.12.2.3, 5.12.2.5, 5.12.2.7 - Re-worded by removing KSAT from command uplink references. NEN will perform command and tlm while KSAT antennas will be telemetry only. Note: NEN commanding may include SG1-3 at Svalbard, operated by KSAT. MDRA_5.12.3.1 Fixed typo - removed "uplink" as this is covered by requirement 5.12.2.4 MDRA_5.12.3.2 Fixed typo – 80% of spherical field should be used rather than 90%. This was changed in Rev – of this document on the tlm side but not on the command side (oversight) MDRA_5.12.3.4 Normal operations S-band data rate is now 256 kbps (CCB003) MDRA_5.12.3.8 Normal operation S-band data rate is not 256 kbps and Rate ½ convolutional encoded (CCB003) MDRA_5.12.3.2 - Fixed typo - removed "uplink" as this is covered by requirement 5.12.2.4 MDRA_5.10.7 Clarified that inrush current is specified in the component specs rather than the Observatory Elec ICD (this doc is instrument specific) MDRA_5.7.16 – clarified this requirement. Pointing accuracy is

		relaxed during momentum unloads and this will be specified in the SC Spec, A101-RQ-09-0264. MDRA_7.3.2 – removed sentence about Svalbard being the primary ground station. NEN & KSAT are equal contributors. MDRA_7.6 – added "TDRSS" to the requirement to clarify; this was the original intent. Clarified that KSAT will not provide commanding. MDRA_5.12.2.8 Changed S-band uplink BER requirement from 10-6 to 10-5 to close the link calculation. BCH encoding will detect errors and C&DH will reject erroneous commands MDRA_5.12.4.3 Changed X-band information rate from 13.125 to 13.1 Mbps; actual rate will be close depending on final design
B	3-31-2011	MDRA_7.7 Clarified the intent. MOC to provide HK data to IOC and Science to SDP; MOC to send subset of HK to SDP; SDP will make Science available to IOC. MDRA_7.3.2 Fixed typo - removed redundant "data"
B	12-21-2011	MDRA_7.9.4 Changed 10 km orbit determination requirement for FDF to "best effort". FDF would not agree to 10 km however their methods are sufficient to meet IRIS mission needs. 10 km was carried over from the TRACE MRD.
B	01-03-2012	MDRA_5.7.17 Relaxed ACS slew time requirements. From: 20 arcmin in ≤ 2 min to ≤ 6 min. Change is necessitated by FSW handshaking overhead between GT & ACS and large quantity of steps to complete NS, EW and equator to limb slews needed for 4-Limb Co-Alignment calibration. New requirement still meets calibration objective.
B	01-06-2012	MDRA_5.10.5 Nominal input voltage to SC components has been changed from +28 to +32V; this is the realistic value consistent with the Li-Ion battery to be used for IRIS

TBD/TBR List

Section	Description	Responsible Engineer	Due Date

Table of Contents

Table of Contents **7**
List of Figures **7**
List of Tables **7**
1.0 Scope **8**
1.1 Requirement Identifier 8
1.2 Requirements Flow-Down, Control and Verification 8
2.0 Applicable Documents **11**
3.0 Mission Overview **12**
4.0 Level 2 Requirements **14**

List of Figures

Figure 2-1 **Notional IRIS Project Requirements Flow-down** 9

List of Tables

Table 2-1 Subsystem Requirements Flow-Down Key 10

1.0 Scope

This document defines the IRIS Mission Level 2 requirements for the baseline mission encompassing science and instrument, mission implementation and spacecraft, launch vehicle and ground data system requirements. The IRIS Chief Systems Engineer shall flow these requirements to the Level 3 Requirements as shown in Figure 1.

Mission Level Requirements are those which when met, satisfy the mission objectives successfully. For SMEX missions, incorporation of well defined systems is necessary in order to meet the short development schedule; this is true for IRIS. Therefore this document defines mission requirements and imposes some system level requirements, classifying all as simply Level 2 requirements. The Level 2 MDRA flows functional and performance requirements to the following Level 3 documents:

- Instrument Performance Specification, A101-RQ-09-0261
- Spacecraft System Specification, A101-RQ-09-0264
- MOC System Spec, A101-RQ-09-0518
- Launch Vehicle Interface Requirements Document, A101-RQ-09-0267

A series of Interface Control Documents (ICDs) further impose performance requirements on the Instrument, Spacecraft, MOC and SOC System Specifications. A series of subsystem specifications for Instrument and Spacecraft components comprise the Level 4 Specifications.

Programmatic requirements are organized in the IRIS Project Plan, A101-PN-09-0314, and flow thorough statements of work.

1.1 Requirement Identifier

The ReqID for requirements in this document is of the form MDRA_xxxx ( ), where xxxx is a sequential, but not continuous, integral numbering system. The requirements have been allocated to the Instrument, Spacecraft and Ground Data System subsystem; the allocation is not evident in this document but rather the LMSAL requirements management database.

In the context of this document, statements using the word “shall” are mandatory requirements, to be verified by ground inspection, test, or analysis. Statements using the words “is” or “will” are descriptive, or indicate intent, and provide information relative to understanding the requirements, but are not themselves requirements subject to verification. Statements using the word “should” indicate goals for which a best effort shall be made.

1.2 Requirements Flow-Down, Control and Verification

Level 2 Requirements flow to Level 3 specifications as shown in Figure 1.2-1 and to subsystems via identifiers listed in Table 1.2-1. The IRIS Project requirements database will provide traceability of Level 2 to Level 3 specific requirement IDs.

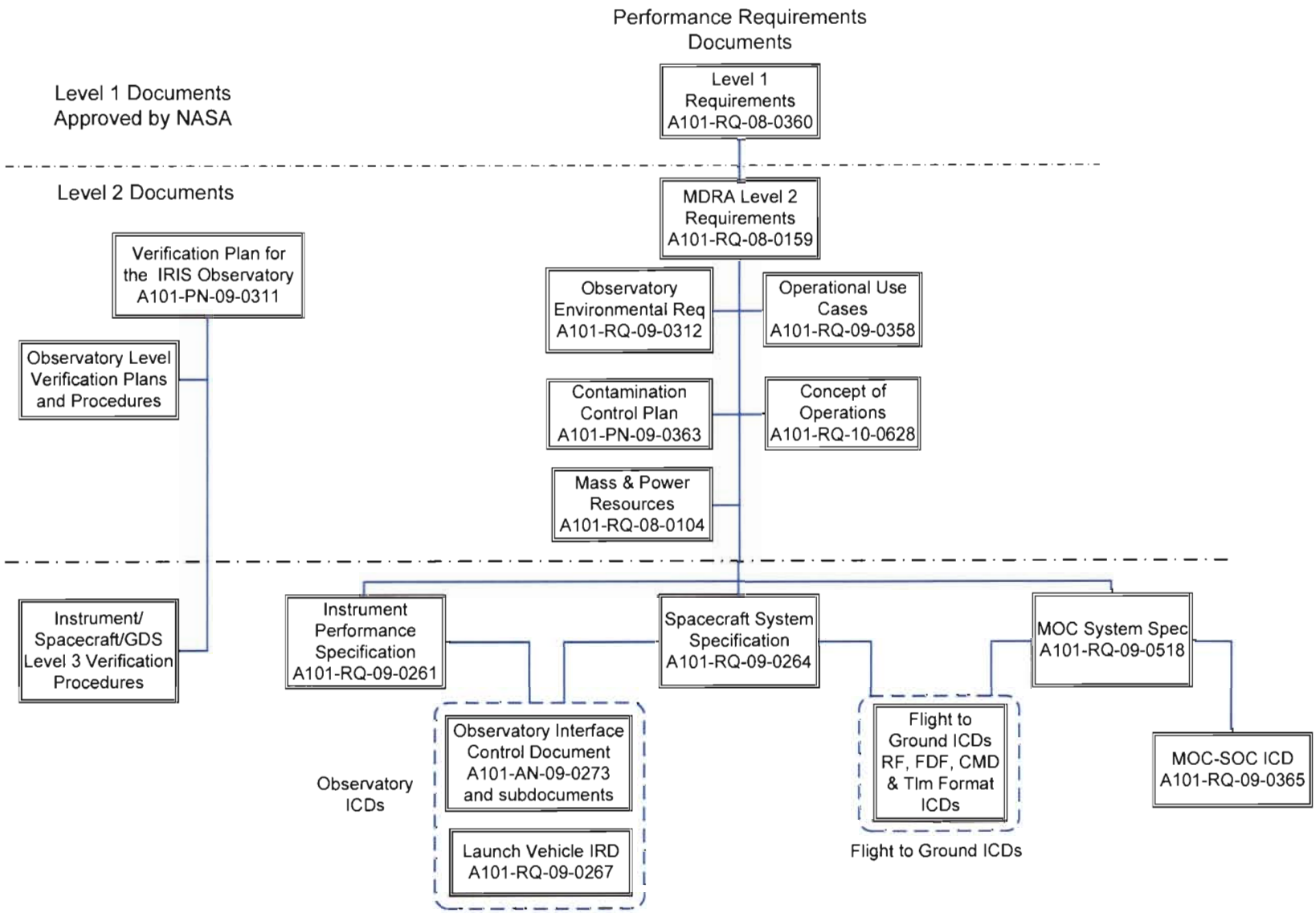

Figure 2-1 **Notional IRIS Project Requirements Flow-down**

Acronym	Subsystem	Responsible Engineer
System Engineering		
Mission_Analysis	Pertains to orbit and/or other aspects of mission analysis	Hoffmann
LV IRD	Launch Vehicle Interface Requirements Document	Hoffmann
Obs_Use	Use Cases that pertain to the Instrument - Spacecraft interaction	Hoffmann
Instrument		
IOP	Instrument Optics Package (applicable to entire instrument)	Chou
IEB	Instrument Electronics Box	Lindgren
IEB_FSW	Instrument Flight Software	Nguyen-Phuc
IOP_Mech	Instrument Mechanical	Chou
IOP_Therm	Instrument Thermal System	Yanari
ISS	Image Stabilzation System	Tarbell/Edwards
CCD	CCD Camera System	Duncan
SG	Spectrograph	Wuelser
SJI	Slit-Jaw Imager	Wuelser
TA	Telescope Assembly	SAO
Science	Science Analysis	DePontieu
Spacecrraft		
SC	Spacecraft	Allard
ACS	Attitude Control Subsystem	Dougherty
C&DH	Command and Data Handling	Butcher
SC_FSW	SC Flight Software	Plante
Comm	Communications System	Flournoy
SC_Mech	Spacecraft Mechanical	Doran
SC_Pwr	Spacecraft Power System	Andrews
SC_Therm	Spacecraft Thermal System	Yanari
Ground Data System		
MOS/GDS	Ground Data System	Strong
JSOC-SDP	Joint Science Operations Center, Science Data Processing Facility	Bush
JSOC-IOC	Joint Science Operations Center, Instrument Operations Center	Hurlburt

Table 2-1 Subsystem Requirements Flow-Down Key

This document is under configuration control by IRIS Project Configuration Management Office and the Chief System Engineer (CSE). Any changes must be routed to the CSE, who will obtain the necessary agreement from scientists and engineers (starting with those people on the signature page, but also including subsystem leads for any affected systems) before posting it as the official version.

Level 1-3 requirements are maintained in a single verification database for the IRIS Project; the verification process is described in the Verification Plan for the IRIS Observatory, A101-PN-09-0311.

2.0 Applicable Documents

Project Documents

A101-RQ-08-0160	Program-Level Requirements for the Interface Region Imaging Spectrograph (IRIS) Project CDRL 24
A101-RQ-09-0273	IRIS Observatory ICD
A101-RQ-09-0261	IRIS Instrument Performance Specification
A101-RQ-09-0264	Spacecraft System Specification
A101-RQ-08-0360	IRIS Project Level Requirements
A101-PN-09-0314	IRIS Project Plan
A101-PN-09-0311	Verification Plan for the IRIS Observatory
A101-PN-09-0363	IRIS Contamination Control Plan
A101-PN-09-0312	Observatory Environmental Requirements
A101-AN-08-0104	IRIS Mass and Power Resource Requirements
A101-RQ-09-0358	Operational Use Case Requirements
A101-RQ-09-0261	Instrument Performance Specification
A101-RQ-09-0267	Launch Vehicle Interface Requirements Document
A101-RQ-09-0518	MOC System Spec
A101-AN-09-0273	Observatory Interface Control Document
A101-RQ-09-0475	Structural, Mechanical, Thermal ICD
A101-RQ-09-0476	Electrical & 1553 ICD
A101-RQ-09-0477	HSB & 1553 SW ICD
A101-RQ-09-0478	GT-ACS ICD
A101-RQ-09-0307	Pointing Jitter and Alignment Budget
A101-RQ-09-0443	Fault Protection Requirements Document
A101-RQ-09-0479	Gegenschein Imager ICD
A101-RQ-09-0496	Observatory to GSE Reqs & ICD
A101-RQ-09-0364	CMD & Tlm Format ICD (CCSDS Spec)
A101-RQ-09-0447	Cmd & Tlm Dictionary
A101-RQ-09-0444	RF ICD
A101-RQ-09-0446	Flight Dynamics ICD
A101-RQ-09-0365	MOC-SOC ICD
A101-RQ-10-0770	IRIS Observatory Timing ICD

Government Documents

NPR 7120.5D	NASA Space Flight Program and Project Management Requirements
NPR 8705.4	Risk Classification for NASA Payloads
GSFC-STD-1000, Rev E	Goddard Space Flight Center Rules for the Design, Development, Verification, and Operation of Flight Systems
GSFC-STD-7000	General Environmental Verification Standards (GEVS)
410-RQMT-0036	SMEX Mission Assurance Requirements

NPR 8715.6	NASA Procedural Requirements for Limiting Orbital Debris
NASA-HDBK-4001	Electrical Grounding Architecture for Unmanned Spacecraft.
NASA-HDBK-4006	Low Earth Orbit Spacecraft Charging Design Handbook.

3.0 Mission Overview

The Interface Region Imaging Spectrograph (IRIS) opens a window of discovery onto a crucial gap in our current observational capabilities: IRIS is designed to measure the flow of energy and plasma through the foundation of the Sun's atmosphere and heliosphere formed by the solar chromosphere and transition region. In this interface region, all but a few percent of the Sun's non-radiative energy flux is converted into heat and radiation, with a little leaking through to power the corona and solar wind. To understand how this domain powers mass and energy flows into the heliosphere, IRIS combines high-throughput spectroscopy and high-resolution imaging in ultraviolet windows around 1400Å and 2800Å, with advanced modeling and with supplemental information from close collaborations with other space- and ground-based observatories.

The IRIS Mission objectives are captured in three crucial questions:

- Which types of non-thermal energy dominate in the chromosphere and beyond?
- How does the chromosphere regulate mass and energy supply to the corona and heliosphere?
- How do magnetic flux and matter rise through the lower atmosphere, and what role does flux emergence play in flares and mass ejections?

The IRIS mission science objectives require a high resolution imaging spectrometer observing in the UV and Near-UV to observe the chromosphere and transition region between 5,000K and 1.5×10^6K. The required spectral resolution of calibrated spectra must provide 0.5 km/s velocity resolution in bright lines with spatial resolution of 0.4 arcsec and a field-of-view of 120 arcsec. The throughput of the instrument must enable a 10s observing cadence. The solar event and evolution timescales require eight-hour observing periods.

IRIS achieves these requirements with a 20-cm UV telescope that is based on the SDO AIA design, but with a longer focal length to provide the required spatial resolution. The telescope feeds a stigmatic UV spectrograph and a slit-jaw imager that provide simultaneous intensity and velocity maps in multiple UV emission lines emitted by chromospheric and transition region plasma. The spectrograph has a Czerny-Turner design using two plane reflection gratings and spherical collimator and camera mirrors, which simplifies fabrication and assembly. The spectrograph mechanical design uses techniques employed on Hinode FPP and SDO HMI.

The instrument electronics reuses SDO AIA and HMI flight designs. Except for the backplane in the instrument electronics boxes and reprogrammed FPGAs for the mechanisms, all electronic board designs are reused from SDO unchanged. IRIS utilizes two flight-spare SDO camera electronic boxes. The optical design of the Guide Telescope (GT), which provides jitter signals for image stabilization by the active secondary telescope mirror and for the spacecraft attitude control system (ACS), is the same as TRACE and very similar to SECCHI and to AIA.

The instrument integrates to a compact spacecraft that is based on Lunar Prospector, Spitzer, IMAGE, and XSS-11. The spacecraft has no consumables and carries X-band and S-band transceivers for commanding and telemetry downlink. It provides a stable platform from which to make high-resolution observations. Inputs from the star trackers and GT are used by the ACS for fine sun pointing which meets all requirements with margin. The RAD750 control computer, ACS, and communication system are in an integrated avionics unit. Selected hardware redundancy is implemented, including star trackers, reaction wheels, solar cells, ACS and other electronics.

A launch vehicle will be procured through the NASA/Launch Services Program (LSP) via the NASA Launch Services (NLS) contract. The launch vehicle will launch IRIS into a sun-synchronous orbit that provides an 7-9 month season of uninterrupted observing each year. Data are downlinked 10-13 times a day to the Svalbard Ground Station in Norway and NASA Near Earth Network (NEN) sites. Operations will be conducted from the Ames Research Center (ARC) during working hours, five days a week, with science planning performed at the Lockheed Martin Solar and Atmospheric Laboratory (LMSAL). Data from IRIS is transferred to the SDO Joint Science Operations Center, Science Data Processing Facility (JSOC-SDP) located at Stanford University and LMATC. The JSOC will archive 60 Gbits/day of IRIS data. The IRIS data volume over the whole mission is less than the equivalent of three days observing with SDO AIA and HMI, and therefore is readily accommodated within and served from the JSOC system.

Members of the IRIS team are developing the most advanced radiative MHD codes available for the solar atmosphere, and the program will support enhancements, e.g., for speed and more accurate physics of the interface region. Comparisons of IRIS data with numerical simulations will enable interpretation in terms of the fundamental plasma-physical processes.

4.0 Level 2 Requirements

Req ID	Section Title	Project Level 2 Requirements	Trace From	Trace To
MDRA_4.0	**SCIENCE AND INSTRUMENT PERFORMANCE REQUIREMENTS**			
MDRA_4.1	**NUV/FUV Slit-Jaw Imager**	The IRIS Instrument shall have a slit-jaw imaging system with capabilities in the NUV and FUV channels for chromospheric, transition-region, and near-photospheric imaging. This requires a system with four channels with bandpasses of approximately 50 Å in the FUV and better than 10 Å in the NUV; these channels shall be tuned to 1335 Å, 1400 Å, 2796 Å, and 2831 Å.	PLR_4.1.1.1 PLR_4.1.1.5 PLR_4.1.4.1 PLR_4.1.4.3	SJI
MDRA_4.2	**NUV/FUV Spectrograph**	The IRIS Instrument shall observe spectral lines from the photosphere to low corona with particular focus on the chromosphere to low transition region, within as compact a wavelength range as possible to minimize detector and telemetry requirements. The IRIS baseline design is to meet these requirements by spectroscopic observations in the ranges of 1332-1358 Å (FUV-1), 1390-1406 Å (FUV-2), and in a >40Å wavelength window around the strong 2796Å and 2803Å lines (NUV, the Mg II h/k resonance lines and surrounding line wings).	PLR_4.1.1.1 PLR_4.1.1.4 PLR_4.1.4.1 PLR_4.1.4.2	TA SG IEB_FSW Obs_Use
MDRA_4.3	**Fields of View**	The IRIS Instrument shall obtain slit-jaw images over a field of view of 167 (minimum dimension) arcseconds, and obtain spectra with a slit of matching length and a scanning range of ± 60 arcseconds to achieve a 120x167 arcsecond field of view.	PLR_4.1.3.2 PLR_4.1.3.4	TA SJI SG ISS CCD IEB_FSW Obs_Use
MDRA_4.4	**Angular Resolution**	The IRIS Instrument shall achieve an angular resolution (PSF FWHM and slit width) of better than 0.4 arcseconds. Allocations to the Telescope Assembly and the Spectrograph Assembly will be made in the Instrument Specification, A101-RQ-09-0261.	PLR_4.1.3.3 PLR_4.1.3.5	TA SJI SG
MDRA_4.5	**Spectral Resolution**	The IRIS Instrument shall obtain spectra with a resolution of 40 mÅ (or better) with 12.5 mÅ pixels at 1400 Å and 80 mÅ (or better) with 25 mÅ pixels at 2800 Å. The wavelength scale shall be calibratable post-facto to better than 1 km/s over periods of at least one hour.	PLR_4.1.3.5 PLR_4.1.3.6 PLR_4.1.3.7	SG Science IEB_FSW

Req ID	Section Title	Project Level 2 Requirements	Trace From	Trace To
MDRA_4.6	**Raster Mode Operation**	The IRIS instrument shall enable repeated rastering of the images over the spectrograph slit over an area of 3.3 arcseconds in steps of 0.33 arcseconds within 10 s intervals.	PLR_4.1.1.2	ISS Obs_Use IEB_FSW
MDRA_4.7	**Data Compression**	The IRIS Instrument data handling system shall enable compression to an average of 3 bits/pixel for sets of spectra and slit-jaw images for an average data rate of 0.7 Mbits/s. Compression assumes the use of RICE compression algorithms and Look-up Tables (LUTs).	PLR_4.1.3.1	IEB IEB_FSW Obs_Use
MDRA_4.8	**Time Reconstruction**	The IRIS Observatory and Ground Data System shall be designed to allow accurate reconstruction of clock timing of observations with a final precision of 0.5s relative to UTC after the observations. Relative timing of sequential images requires that the IRIS clock shall not have noise larger than 0.1s RMS over the course of one hour.	Derived from IRIS Project Plan for coordinated observations	IEB IEB_FSW C&DH SC_FSW MOS/GDS Obs_Use
MDRA_4.9	**Image Stabilization**	The IRIS Instrument shall provide an Image Stabilization System that provides disturbance attenuation better than that modeled by Figure 4.9-1, where w1= 16.0 Hz, w2= 19.3 Hz, and zeta1= 0.4 and zeta2=0.22. This applies to the frequency range 0.01 < w < 30 Hz. $$ATF(\omega) = \left[\frac{\omega^2 + 2\varsigma_1\omega_1\omega + \omega_1^2}{\omega^2 + 2\varsigma_2\omega_2\omega + \omega_2^2}\right]^8$$ Figure 4.9 - 1	PLR_4.1.3.3 PLR_4.1.3.5	ISS IEB_FSW
MDRA_4.10	**Guide Telescope (GT)**	The IRIS Instrument shall provide a single guide telescope with a linear range of > ± 70 arcseconds in the X & Y axes.	MDRA Derived	GT IEB_FSW
MDRA_4.10.1	**GT Acquisition Range**	The guide telescope shall provide an acquisition range of ≥ 720 arcseconds.	MDRA Derived	GT IEB_FSW
MDRA_4.10.2	**GT Noise Equivalent Angle**	The guide telescope shall provide error signals with a noise equivalent angle of <0.2 arcsec (1 σ).	MDRA Derived	GT IEB_FSW

Req ID	Section Title	Project Level 2 Requirements	Trace From	Trace To
MDRA_4.10.3	**GT Error Signal Update Rate**	The guide telescope shall provide an update frequency to the spacecraft ACS of at least 5 Hz.	MDRA Derived	GT IEB_FSW
MDRA_4.11	**Campaign Operations**	Higher cadence observing campaigns shall be possible during periods of eclipse-free orbits for up to five hours continuously.	PLR_4.1.3.1	IEB_FSW
MDRA_4.12	**Imaging Cadence**	The slit jaw imager shall obtain images at a cadence equal to or better than 20 seconds.	PLR_4.1.1.3	IEB_FSW
MDRA_4.13	**Spectral Cadence**	The spectrograph shall be capable of a cadence no slower than one spectral readout per 2 seconds for stronger FUV spectral lines in active regions.	PLR_4.1.1.2	SG IEB_FSW
MDRA_5.0	**MISSION IMPLEMENTATION AND SPACECRAFT REQUIREMENTS**			
MDRA_5.1	**Flight System Definition**			

Req ID	Section Title	Project Level 2 Requirements	Trace From	Trace To
MDRA_5.1.1	Instrument Definition	The IRIS Instrument consists of an IRIS Optics Package (IOP), IRIS Electronics Box (IEB), Flight Software (FSW) mounting struts and IRIS harness. The IOP is comprised of the Science Telescope Assembly (ST), Guide Telescope (GT), Spectrograph (SG), two Camera Electronics Boxes (CEBs), and intra-instrument harnessing. 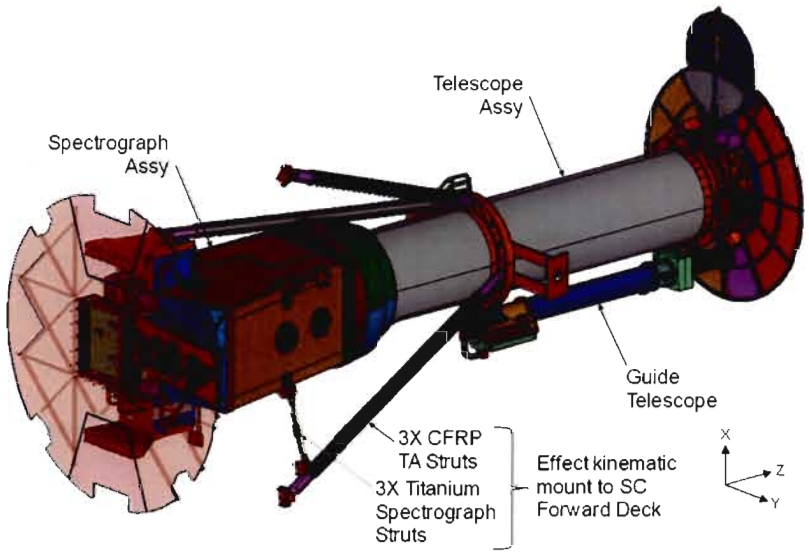	PLR_4.2.1 PLR_4.2.2.1	IOP - Info Only
~~MDRA_5.1.2~~ Requirement Deleted per CCB001	~~Gegenschein Imager~~	~~As a goal, the IRIS Project will implement a student collaboration project. The Gegenschein Imager (GI) is the Instrument to be mounted on the IRIS Observatory provided by the Montana State University (MSU) Student Collaboration (SC) investigation. The GI consists of the GI Camera mounted on the anti-sun side of the IRIS spacecraft with a nominal line of sight 180 degrees away from the sun, the GI interface electronics mounted internal to the IRIS spacecraft, and the GI intra-Instrument harness.~~	Derived from AO	GI - Info Only

Req ID	Section Title	Project Level 2 Requirements	Trace From	Trace To
MDRA_5.1.3	Spacecraft Definition	The IRIS Spacecraft consists of the following subsystems: Attitude Control, Structures and Mechanisms, Thermal Control, Electrical Power, Communications, Command and Data Handling, Power Distribution, and Flight Software. 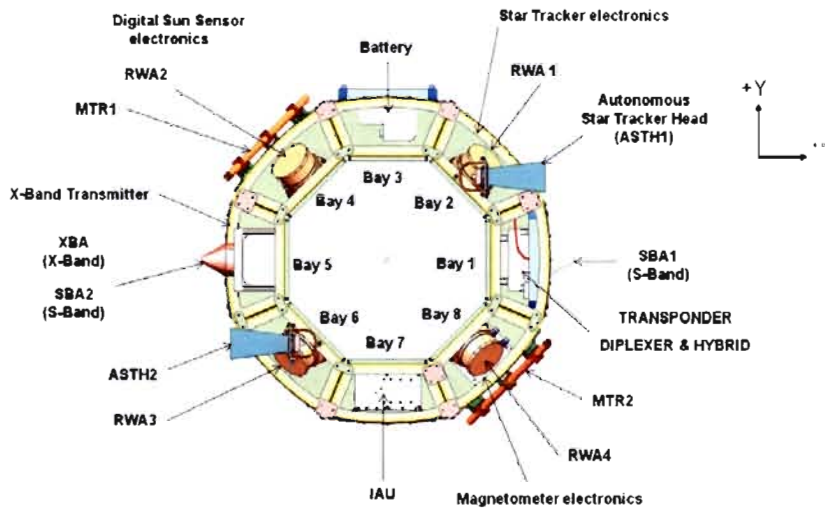	PLR_4.2.2.1	SC - Info Only

Req ID	Section Title	Project Level 2 Requirements	Trace From	Trace To
MDRA_5.2	**Observatory Coordinate System Definition**	The IRIS Observatory coordinate system is right hand orthogonal. The Z-axis is parallel to the nominal axis of the primary telescope, pointing out from the telescope toward the Sun. The X-axis points toward the side with Instrument Electronics Box (in the Nominal attitude this is Northward). The Y-axis completes the right hand orthogonal system (in the Nominal attitude this is to the right when facing the Sun, with North upward.) The origin is the center of the launch vehicle separation plane. Roll, Yaw, and Pitch are defined to be rotations about the Z, X, and Y axes respectively, with positive values indicating clockwise rotations when facing in the +Z, +X or +Y direction. 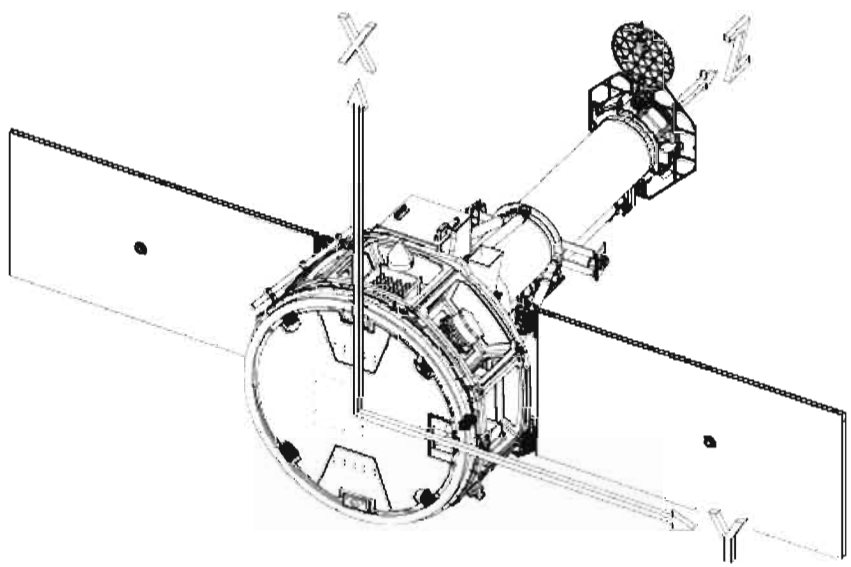	MDRA Derived	IOP - Info Only SC - Info Only

Req ID	Section Title	Project Level 2 Requirements	Trace From	Trace To
MDRA_5.3	**Mission Lifetime**	The IRIS system shall be designed for a lifetime of at least two years of on-orbit operations not including the initial 30 day check out period, but nothing in the spacecraft or instrument design shall preclude the mission from lasting four years.	PLR_4.1.1.6 PLR_4.2.2.4 PLR_4.1.4.4	Mission IOP, IEB SC, ACS Obs_Therm MOS/GDS SC_Pwr
MDRA_5.4	**Launch Vehicle Compatibility**	The IRIS Observatory design shall be consistent with the Launch Vehicle Interface Requirements Document, A101-RQ-09-0267.	PLR_4.2.2.3	IOP_Mech C&DH SC_FSW SC_Mech SC_Pwr LV IRD
MDRA_5.5	**Time of Year**	The IRIS Observatory design shall permit launch any day of the year, including a launch into eclipse conditions.	MDRA Derived	SC_Pwr Obs_Therm LV IRD
MDRA_5.6	**Orbit & Mission Analysis**			
MDRA_5.6.1	Orbit	The trajectory design and launch vehicle performance shall provide IRIS with a minimum of 7 months of eclipse-free viewing the first year and maximize the probability of achieving 7 months per year of eclipse-free viewing averaged over the first two years starting 1 month after launch. The ascending node shall be selected near 6 AM so that eclipse-free viewing is available at the June solstice.	PLR_4.3.2	Mission LV IRD
MDRA_5.6.2	Max Orbit Altitude	The maximum orbit shall have a semi-major axis of 7078 km (700 km altitude). Considering worst case launch vehicle dispersion errors, the max altitude for link margin analysis shall be 745 km. The maximum radiation environment is derived from this orbit (at 700 km average altitude).	MDRA Derived	Mission Comm Sub_Doc Obs_Therm SC_Pwr

Req ID	Section Title	Project Level 2 Requirements	Trace From	Trace To
MDRA_5.6.3	Min Orbit Altitude	The minimum orbit shall have a semi-major axis of 6998 km (620 km altitude). This orbit is used to define the maximum atomic oxygen environment and minimum data volume achievable.	MDRA Derived	Mission Comm Sub_Doc Obs_Therm SC_Pwr ACS
MDRA_5.6.4	Orbit Errors	The IRIS orbit design shall mitigate for launch injection errors so that the Baseline Science Requirements can be achieved. The IRIS Spacecraft does not have a propulsion system.	PLR_4.3.2	Mission LV IRD
MDRA_5.6.5	UV Eclipses	For calculation of eclipse-free viewing time, eclipse entry shall be defined as the height above the surface of the Earth where the IRIS observing UV wavelengths are absorbed by the atmosphere; this height has been determined to be 250 Km.	PLR_4.3.2	Mission LV IRD SC_Pwr Obs_Therm Obs_Therm
MDRA_5.6.6	Solar Eclipses	The Observatory power and thermal systems shall be designed to support operations with a maximum solar eclipse duration of 30 minutes. This duration is computed for a 620 km sun-synchronous orbit when considering the RSS of possible 3-sigma dispersions.	MDRA Derived	Mission SC_Pwr Obs_Therm ACS
MDRA_5.6.7	Orbit Lifetime	The IRIS orbit shall be designed to allow vehicle re-entry via atmospheric drag within 25 years after the completion of mission but no more than 30 years after launch.	PLR_4.3.4 NASA-STD 8719.14 Req 4.6-1	Mission LV IRD
MDRA_5.6.8	Re-entry Debris	For uncontrolled orbital reentry, the risk of human casualty from surviving debris shall not exceed 0.0001 (1:10,000). The potential for human casualty is assumed for any object with an impacting kinetic energy in excess of 15 joules. Additional design requirements for IRIS are documented in A101-RP-10-0765, Design for Demise Guidelines.	PLR_4.3.4 NASA-STD 8719.14 Req 4.7-1	Mission IOP SC

Req ID	Section Title	Project Level 2 Requirements	Trace From	Trace To
MDRA_5.7	**Flight System Pointing Control**	Observation pointing control uses data from the Instrument provided guide telescope as the pitch and yaw reference, and the Spacecraft provided star tracker for roll reference. The guide telescope provides pitch and yaw error signals for the measured location of the solar disk relative to the guide telescope field of view. The Fine Sunpoint control system drives the guide telescope error signals to zero, while stabilizing the commanded roll angle.	PLR_4.2.2.1	GT - Info Only ACS - Info Only
MDRA_5.7.1	Pointing using a Guide Telescope	For science pointing pitch and yaw control, the ACS shall use null error position information from the Guide Telescope.	PLR_4.2.2.1	ACS SC_FSW GT Obs_Use IEB_FSW
MDRA_5.7.2	Guide Telescope Acquisition	The ACS shall point the Guide Telescope to ≤ 720 arcsec (3 σ) in pitch and yaw prior so that it may acquire the sun.	PLR_4.2.2.1	ACS SC_FSW Obs_Use
MDRA_5.7.3	Line of Sight Pointing	Using GT error signals, the spacecraft shall be able to point the instrument field of view to commanded positions up to 18 arcminutes from sun center. This requirement applies to the Fine Sunpointing mode.	PLR_4.2.2.1	ACS SC_FSW GT Obs_Use IEB_FSW
MDRA_5.7.4	Line of Sight Bias Pointing	The spacecraft shall be able to point the instrument field of view to a commanded attitude offset up to 30 arcseconds in the X and Y axes axis from the null position. This requirement applies to the Fine Sunpointing mode.	PLR_4.2.2.1	ACS SC_FSW Obs_Use IEB_FSW
MDRA_5.7.5	Line of Sight Pointing Accuracy	The ACS peak error from null shall not to exceed ±5 arcseconds (3 σ) in the pitch and yaw axes. This requirement applies to the Fine Sunpointing science observing mode, except for momentum un-loading, and allows the instrument Image Stabilization System (ISS) to operate in its linear range. Requirements for pointing during momentum un-loading will be defined in the Spacecraft Spec, A101-RQ-09-0264.	PLR_4.2.2.1	ACS SC_FSW ISS Obs_Use

Req ID	Section Title	Project Level 2 Requirements	Trace From	Trace To
MDRA_5.7.6	Line of Sight Pointing Knowledge	The Instrument shall provide sufficiently accurate attitude information to allow reconstruction (on the ground, post calibration) of the instrument field of view in solar coordinates to ±2 arcsec in pitch and yaw (per axis, 3 σ). This will be accomplished by on-orbit coalignment of the Guide Telescope boresight and science telescope image.	PLR_4.2.2.1	GT ST Obs_Use IEB_FSW
MDRA_5.7.7	Line of Sight Pointing Stability	The low frequency pointing drift shall be less than 2 arcsec/sec (3 σ) in the pitch and yaw axes.	PLR_4.2.2.1	ACS
MDRA_5.7.8	Line of Sight Maximum Jitter	Blur jitter (RMS blurring) is calculated using the included equation, where PSD is the PSD of disturbances at the mounting interface of the instrument, ATF is the Attenuation Transfer Function of the Image Stabilization System for the instrument, w is the disturbance frequency in Hz, and tau is the exposure time in seconds. $$RMS\ \text{Blurring} = \left[\int_{-\infty}^{\infty} PSD(\omega) * \lvert ATF(\omega)\rvert^2 * \left[1 - \sin c^2(\omega\tau)\right] d\omega\right]^{1/2}$$ The IRIS Blur Jitter shall be less than 0.05 arcseconds as defined by this equation for the nominal exposure time of 0.5 seconds.	PLR_4.2.2.1	ACS ISS
MDRA_5.7.9	Roll about Line of Sight	The ACS shall be able to roll to commandable angles of up to ±90 degrees and hold indefinitely so that the slit orientation can be changed. Operational constraints on the roll duration will be documented in the Observatory Use Case Document, A101-RQ-09-0358.	PLR_4.2.2.1	ACS SC_FSW Obs_Use Comm Obs_Therm
MDRA_5.7.10	Roll Accuracy	The ACS roll angle accuracy shall be ≤ ±0.2° with respect to Solar North.	PLR_4.2.2.1	ACS SC_FSW
MDRA_5.7.11	Roll Knowledge	The Spacecraft shall provide sufficiently accurate roll attitude information to allow reconstruction (on the ground, post calibration) of the instrument field of view to ±120 arcsec in roll (3-sigma).	PLR_4.2.2.1	ACS SC_FSW Obs_Use

Req ID	Section Title	Project Level 2 Requirements	Trace From	Trace To
MDRA_5.7.12	Roll Stability	The low frequency roll drift shall be less than 1 arcmin/min (3 σ) in the roll axis.	PLR_4.2.2.1	ACS
MDRA_5.7.13	Roll Jitter	During observations, the spacecraft attitude shall contribute no more than 5 arcsec image motion in roll (RMS) over a 0.5 s exposure period.	PLR_4.2.2.1	ACS
MDRA_5.7.14	ISS/ACS Interaction	ACS control bandwidth must be separated from the ISS control bandwidth by at least 2 decades. Separation is defined as the distance between the ACS 0 dB crossover and the ISS 0 dB crossover frequencies.	PLR_4.2.2.1	ACS SC_FSW ISS IEB_FSW
MDRA_5.7.15	Target Scheduling	The IRIS Observatory shall change targets according to a stored command timeline uplinked from the ground and executed by the spacecraft C&DH system.	PLR_4.2.2.1	SC_FSW Obs_Use IEB_FSW
MDRA_5.7.16	Pointing Duration	The ACS shall maintain line of sight pointing accuracy (MDRA 5.7.5) in Fine Sunpoint mode, uninterrupted for a minimum of 8 hours, not including during momentum unloading.	PLR_4.2.2.1	ACS SC_FSW Obs_Use
MDRA_5.7.17	Slewing - Line of Sight	The ACS shall complete a slew across the solar diameter (32 arcminutes), either NS or EW, in ≤ 6 minutes; and a slew from equatorial to polar limb, or vice versa, in ≤ 4 minutes; and a slew of 60 arcseconds in ≤ 10 seconds.	PLR_4.2.2.1	ACS SC_FSW Obs_Use IEB_FSW
MDRA_5.7.18	Slewing - Roll	The ACS should complete roll slews of 90° in less than 8 min. On average, one 90° slew (and return) per week is anticipated.	PLR_4.2.2.1	ACS SC_FSW Obs_Use
MDRA_5.7.19	Solar Rotation Tracking	The instrument Guide Telescope / ISS system shall compensate for solar rotation tracking (up to 200 arcseconds in 24 hrs) and make fine adjustments in pointing within a given target region.	PLR_4.2.2.1	Obs_Use IEB_FSW
MDRA_5.7.20	Momentum Management	The Spacecraft shall be designed to provide autonomous momentum management for all ACS modes of operation.	PLR_4.2.2.1	ACS SC_FSW Obs_Use

Req ID	Section Title	Project Level 2 Requirements	Trace From	Trace To
MDRA_5.7.21	Safehold Mode	The ACS design shall provide an autonomous mode used to maintain a power-safe and thermal-safe orientation in the event of observatory anomalies; this mode shall be maintained indefinitely without ground intervention.	PLR_4.2.2.1	ACS C&DH SC_FSW Obs_Use
MDRA_5.7.22	GT-ST LOS Stability	The peak drift between the Guide Telescope error signal null point and science telescope boresight shall not exceed 0.5 arcseconds perpendicular to the Spectrograph slit and 3 arcseconds parallel to the slit, in any 30-minute period of observing.	PLR_4.2.2.1	IOP_Mech Structural Obs_Therm
MDRA_5.8	**Mechanical/ Structural**			
MDRA_5.8.1	Mechanical Envelope	The Observatory shall fit within the Launch Vehicle (LV) envelope as specified in ELV Launch Services Program Information Summary, Nov. 19, 2007, or subsequent updated information provided by NASA/KSC.	PLR_4.2.2.3	SC_Mech IOP_Mech
MDRA_5.8.2	SC Bus Accommodation	The Spacecraft bus structure shall accommodate the Instrument and the Spacecraft subsystems.	PLR_4.2.2.1	SC_Mech
MDRA_5.8.3	Field of Views	The Observatory design shall provide a clear field of view for all relevant instrument and spacecraft components as specified in A101-RQ-09-0475, the Structural, Mechanical, and Thermal Interface Control Document.	PLR_4.2.2.1	SC_Mech IOP_Mech
MDRA_5.8.4	Strength	Observatory structures shall have sufficient strength and maintain positive stress margins when subjected to the launch vehicle environment through all mission phases.	GSFC-STD-7000, GEVS	SC_Mech IOP_Mech
MDRA_5.8.5	First Mode Frequency	The IRIS Observatory structure shall have a first mode fundamental frequency > 20 Hz.	PLR_4.2.2.3	SC_Mech IOP_Mech
MDRA_5.8.6	Structural Design Standard	Structural analysis and design factors of safety used to calculate structural margins, shall apply to all Observatory structural systems in accordance with GEVS Section 2.2.5.	GSFC-STD-1000-E GSFC GOLD Rules	SC_Mech IOP_Mech
MDRA_5.8.7	Observatory Mass	The IRIS Observatory mass shall not exceed the capability of the Launch Vehicle for the design orbit. Mass & Power Resources shall be allocated and managed as specified in A101-RQ-08-0104.	PLR_4.2.2.3	SC_Mech IOP_Mech Sub_Doc

Req ID	Section Title	Project Level 2 Requirements	Trace From	Trace To
MDRA_5.8.8	Alignment	The Observatory design shall be compliant with the critical alignments for specified in the Pointing, Jitter and Alignment Budget, A101-RQ-09-0307.	PLR_4.2.2.1	SC_Mech IOP_Mech Sub_Doc
MDRA_5.9	**Thermal**			
MDRA_5.9.1	Instrument Thermal Interface	The Instrument Optics Package (IOP) shall be thermally isolated from the spacecraft.	PLR_4.2.2.1	Obs_Therm
MDRA_5.9.2	Operational Thermal Control	The instrument and spacecraft shall each collect its own temperature data and maintain its own autonomous temperature control during operational modes.	PLR_4.2.2.1	Obs_Therm IEB IEB_FSW C&DH SC_FSW SC_Pwr
MDRA_5.9.3	Survival Thermal Control	The spacecraft shall provide autonomous survival range temperature control for the Observatory at all times.	PLR_4.2.2.1	Obs_Therm SC_FSW SC_Pwr
MDRA_5.9.4	Temperature Ranges	The Observatory operational and survival temperature ranges for components shall be derived from thermal analyses and specified in the Instrument (A101-RQ-09-0261) and Spacecraft Specifications (A101-RQ-09-0264).	PLR_4.2.2.1	Obs_Therm Sub_Doc
MDRA_5.9.5	Thermal Material Properties	All thermal analysis shall employ thermal coatings properties validated to be accurate for materials and mission flight parameters over the lifecycle of the mission.	GSFC-STD-1000-E GSFC GOLD Rules	Obs_Therm
MDRA_5.9.6	Thermal Model and Design Cases	The Observatory thermal control design shall be verified by a test correlated thermal model to the design cases specified in the IRIS Environmental Requirements (A101-RQ-09-0312).	GSFC-STD-7000, GEVS	Obs_Therm Sub_Doc
MDRA_5.9.7	Thermal Margins	Thermal design shall provide adequate margin between stacked worst-case flight predictions and component allowable flight temperature limits per GEVS 2.6 and 545-PG-8700.2.1A.	GSFC-STD-1000-E GSFC GOLD Rules	Obs_Therm
MDRA_5.10	**Electrical Power**			

Req ID	Section Title	Project Level 2 Requirements	Trace From	Trace To
MDRA_5.10.1	Generation	The Spacecraft power system shall provide sufficient power generation, distribution and storage to support the Observatory through all the phases of the mission.	PLR_4.2.2.1	SC_Pwr
MDRA_5.10.2	Power Budget	The electrical power consumption for the Instrument and Spacecraft during all modes of operation shall be managed within the power budget allocations as specified in the IRIS Observatory Mass and Power Resources, A101-RQ-08-0104.	PLR_4.2.2.1	IEB SC_Pwr Sub_Doc
MDRA_5.10.3	Distribution	The Spacecraft power system shall provide distribution power to all Observatory systems.	PLR_4.2.2.1	SC_Pwr
MDRA_5.10.4	CCD Bypass Heater	In addition to the primary power services, the Spacecraft power system shall provide a switched CCD decontamination heater service that may be applied by the Spacecraft prior to the application of power to the Instrument.	PLR_4.2.2.1	SC_Pwr IEB_FSW SC_FSW Obs_Use
MDRA_5.10.5	Voltage	Unregulated power shall be provided to all Observatory systems at a voltage in the range ≥ 24 Vdc and ≤ 32 Vdc at the input connectors with the nominal input voltage of +32 VDC. Observatory systems are not required to operate within performance specification above or below these limits.	PLR_4.2.2.1	SC_Pwr IEB
MDRA_5.10.6	Voltage Transients	All subsystems shall be designed to not be damaged by any voltage in the range of 0 to +40 V DC for up to 10 milliseconds applied to the power input during anomalistic operations. No flight component will be subjected to these tests. Verification will be by analysis or test on an engineering test unit (ETU) or at a board level only.	PLR_4.2.2.1	SC_Pwr IEB
MDRA_5.10.7	In-Rush Current	All Observatory components shall design to appropriate in-rush current requirements as specified in their component specification; for the Instrument, this is defined in A101-RQ-09-0476, Electrical Interface Control Document.	PLR_4.2.2.1	SC_Pwr IEB Sub_Doc
MDRA_5.10.8	Data Interfaces	The Spacecraft shall provide the Instrument electrical interfaces to implement the MIL-STD-1553 data bus, IEEE-1355 High Speed Bus (Spacewire), and passive analog telemetry interfaces per requirements identified in A101-RQ-09-0476, Electrical Interface Control Document.	PLR_4.2.2.1	SC_Pwr IEB IEB_FSW SC_FSW Sub_Doc

Req ID	Section Title	Project Level 2 Requirements	Trace From	Trace To
MDRA_5.10.9	Grounding	The overall Observatory design for grounding and bonding shall adhere to NASA Technical Handbook 4001, Electrical Grounding Architecture for Unmanned Spacecraft.	NASA Technical Handbook 4001	SC_Pwr IEB C&DH
MDRA_5.11	**Command and Data Handling**			
MDRA_5.11.1	Communication Architecture	The Observatory shall utilize a MIL-STD 1553 bus as the primary method for distributing commands and collecting telemetry from the science Instrument.	PLR_4.2.2.1	C&DH SC_FSW IEB IEB_FSW
MDRA_5.11.2	Real-Time Commands	The Spacecraft shall provide a capability to receive, decode, authenticate and distribute real-time commands.	PLR_4.2.2.1	C&DH SC_FSW IEB IEB_FSW
MDRA_5.11.3	Absolute Timed Stored Commands	The Spacecraft shall provide at least two Absolute Time Stored (ATS) command sequence buffers with a relative accuracy of 1 second command execution. The buffers shall be sized to accommodate 72 hours of stored commands.	PLR_4.2.2.1	C&DH SC_FSW Obs_Use
MDRA_5.11.4	Relative Timed Stored Commands	The Spacecraft shall provide Relative Time Stored (RTS) command sequences with a relative accuracy of 1 second command execution.	PLR_4.2.2.1	C&DH SC_FSW Obs_Use
MDRA_5.11.5	Instrument Science Data Rate	The Observatory shall utilize the IEEE 1355 interface protocol (SpaceWire) for High Speed Bus (HSB) science data transfer. The link rate is specified in A101-RQ-09-0477, High Speed Bus &1553-Software Interface Control Document.	PLR_4.2.2.1	C&DH SC_FSW IEB IEB_FSW Sub_Doc Obs_Use
MDRA_5.11.6	Data Storage	The Spacecraft shall provide storage for at least 48 Gbits of science and housekeeping data.	PLR_4.2.2.1	C&DH
MDRA_5.11.7	Partitioned Data Storage	The data storage memory shall be partitioned to separate science and housekeeping data.	PLR_4.2.2.1	SC_FSW Obs_Use

Req ID	Section Title	Project Level 2 Requirements	Trace From	Trace To
MDRA_5.11.8	Simultaneous Read and Write	The data storage memory shall allow for simultaneous reading and writing of data.	PLR_4.2.2.1	SC_FSW C&DH
MDRA_5.11.9	Reconfigurable Storage	The data collection rates and partition sizes shall be reconfigurable via ground command.	PLR_4.2.2.1	SC_FSW Obs_Use
MDRA_5.11.10	Real time Telemetry	The Spacecraft shall simultaneously collect and transmit Observatory housekeeping telemetry to the ground station in real-time via the S band telemetry system.	PLR_4.2.2.1	C&DH SC_FSW Obs_Use
MDRA_5.11.11	Stored Telemetry Playback	The Spacecraft shall simultaneously collect and transmit Observatory stored science and housekeeping telemetry to the ground station in real-time via the S or X-band telemetry system.	PLR_4.2.2.1	C&DH SC_FSW Obs_Use
MDRA_5.11.12	Data Formats	Command and telemetry formats shall comply with the CCSDS standard as specified in the CMD & Tlm Format ICD, A101-RQ-09-0364.	PLR_4.2.2.1	SC_FSW IEB IEB_FSW Sub_Doc
MDRA_5.11.13	Data Output	The Spacecraft C&DH shall support data uplink and downlink data rates consistent with the System Level Communications requirements.	PLR_4.2.2.1	C&DH SC_FSW Obs_Use
MDRA_5.11.14	Timing Accuracy	The Spacecraft clock shall not drift more than 100msec over the course of one hour.	PLR_4.2.2.1	C&DH SC_FSW
MDRA_5.11.15	Separation Detection	The C&DH system shall monitor launch vehicle provided breakwire circuits for separation. Separation signals are characterized in the Launch Vehicle IRD (A101-RQ-09-0267).	PLR_4.2.2.1	C&DH SC_FSW LV IRD
MDRA_5.11.16	Deployments	Upon detection of separation, the C&DH shall initiate a pre-programmed, time-driven command sequence to initialize spacecraft components and effect deployments.	PLR_4.2.2.2	C&DH SC_FSW Obs_Use

Req ID	Section Title	Project Level 2 Requirements	Trace From	Trace To
MDRA_5.11.17	Spacecraft Autonomy	The Spacecraft shall possess sufficient onboard autonomy to allow basic fault detection and correction of both the spacecraft and instrument anomalies as specified in the Fault Protection Requirements Document, A101-RQ-09-0443.	PLR_4.2.2.1	C&DH SC_FSW Sub_Doc Obs_Use
MDRA_5.11.18	Memory Management	All Observatory on-board processors shall provide the capability to load and dump code and data from the ground.	PLR_4.2.2.1	C&DH SC_FSW IEB IEB_FSW
MDRA_5.11.19	Real time Telemetry Content	Real-time telemetry, transmitted via S-band, shall include at a minimum, Observatory housekeeping data, significant events and memory dump packets. The significant events shall be those generated in real-time and stored events.	PLR_4.2.2.1	C&DH SC_FSW
MDRA_5.11.20	Stored Telemetry Content	Stored telemetry, transmitted via S or X-band, shall sequentially send stored significant events, housekeeping, and science data.	PLR_4.2.2.1	C&DH SC_FSW
MDRA_5.11.21	Last Command Timer	The IAU shall provide an interface to the S-band transponder to reset the transponder command receiver and associated electronics in the event that commands cannot be received. The IAU fault detection software shall reset this interface after 84 hours of not receiving a command (3 days + 12 hrs). The details of this operation will be specified in the Fault Protection ICD, A101-RQ-09-0443.	PLR_4.2.2.1	C&DH SC_FSW
MDRA_5.12	**Communications**			
MDRA_5.12.1	**Compatibility**	The command uplink shall be compatible with NASA's Near Earth Network (NEN) and NASA's Tracking Data and Relay Satellite System (TDRSS). The telemetry downlink shall be compatable with NEN, TDRSS and the Kongsberg Satellite Services Infrastructure (KSAT). The NEN is characterized in the Near Earth Network User's Guide (453-NENUG), KSAT in it's Infrastructure guide, and the TDRSS system is characterized in the Space Network User's Guide (450-SNUG).	PLR_6.2 PLR_6.3 PLR_7	Comm MOS/GDS
MDRA_5.12.2	**S-Band Uplink**	An S-band uplink shall be provided to support Observatory commanding.	PLR_4.2.2.1	Comm C&DH MOS/GDS

Req ID	Section Title	Project Level 2 Requirements	Trace From	Trace To
MDRA_5.12.2.1	Receiver Power	The uplink receiver shall receive unswitched power from the power system and shall not have the capability to be powered off.	PLR_4.2.2.1	SC_Pwr Comm
MDRA_5.12.2.2	Command Receiver Reset	The transponder shall provide an interface to the IAU and associated electronics that allows the command receiver to be reset via command from the IAU. In the anomalous event that the command receiver cannot accept commands, the IAU will reset this interface. The details of this operation will be specified in the Fault Protection ICD, A101-RQ-09-0443.	PLR_4.2.2.1	Comm
MDRA_5.12.2.3	Cmd Link Margin for NEN sites	The Link margin on the S-band uplink from NEN sites shall be ≥ +3 dB over 90% of the 4∏ steradian sphere. The limiting antenna apertures are the 10 m antennas at McMurdo and Alaska ground stations.	PLR_4.2.2.1 PLR_6.2	Comm MOS/GDS
MDRA_5.12.2.4	Link Margin for TDRSS	Link margin on the S-band uplink from TDRSS shall be ≥ 0 dB over 80% of the 4∏ steradian sphere.	PLR_4.2.2.1 PLR_6.3	Comm MOS/GDS
MDRA_5.12.2.5	Availability to NEN Sites	The S-band command link availability from NEN sites, averaged over any year, shall be ≥ 99%.	PLR_4.2.2.1	Comm MOS/GDS
MDRA_5.12.2.6	Data Rate	The mission shall support an uplink command rate of up to 2 Kbps. This data rate is the "information" rate and does not reflect any encoding overhead.	PLR_4.2.2.1	MOS/GDS Comm C&DH
MDRA_5.12.2.7	Bit Error Rate from NEN sites	The S-band uplink bit error rate from NEN sites shall be $\leq 10^{-6}$.	PLR_4.2.2.1 PLR_6.2	Comm MOS/GDS
MDRA_5.12.2.8	Bit Error Rate from TDRSS	The S-band uplink bit error rate from TDRSS sites shall be $\leq 10^{-5}$.	PLR_4.2.2.1 PLR_6.3	Comm MOS/GDS
MDRA_5.12.2.9	RF and Data Modulation and Encoding	The uplink shall utilize BPSK digital modulation scheme, RHCP, the CCSDS data format, and no encoding. Complete RF characteristics for IRIS shall be specified in the RF ICD, A101-RQ-09-0444.	PLR_4.2.2.1 PLR_6.2	Comm MOS/GDS Sub_Doc
MDRA_5.12.3	**S-Band Downlink**	An S-band downlink shall be provided to support real-time telemetry transfer to the ground station.	PLR_4.2.2.1	Comm C&DH MOS/GDS

Req ID	Section Title	Project Level 2 Requirements	Trace From	Trace To
MDRA_5.12.3.1	Link Margin to NEN and KSAT Sites	Link margin on the S-band downlink to NEN and KSAT sites shall be ≥ +3 dB over ≥ 90 % of the 4∏ steradian sphere. The limiting antenna aperture is the 7.3m antenna at the Svalbard Ground Station operated by KSAT.	PLR_4.2.2.1 PLR_6.2	Comm MOS/GDS
MDRA_5.12.3.2	Link Margin to TDRSS	Link margin on the S-band downlink to TDRSS shall be ≥ 0 dB over ≥ 80 % of the 4∏ steradian sphere.	PLR_4.2.2.1 PLR_6.3	Comm MOS/GDS
MDRA_5.12.3.3	Availability	The S-band telemetry link availability to NEN and KSAT sites, averaged over any year, shall be ≥ 99%.	PLR_4.2.2.1 PLR_6.2	Comm MOS/GDS
MDRA_5.12.3.4	Data Rate for Normal Operations to NEN/KSAT	The S-band downlink rate shall be 256 kbps for normal operations to NEN and KSAT sites. This data rate is the "information" rate and does not reflect any encoding overhead.	PLR_4.2.2.1 PLR_6.2	Comm MOS/GDS C&DH
MDRA_5.12.3.5	Data Rate for L&EO and Contingency Operations thru TDRSS	The S-band downlink rate for L&EO and Contingency operations through TDRSS shall be 4 kbps. This data rate is the "information" rate and does not reflect any encoding overhead.	PLR_4.2.2.1 PLR_6.3	Comm MOS/GDS C&DH
MDRA_5.12.3.6	S-Band Bit Error Rate to NEN/KSAT	The S-band downlink bit error rate to NEN and KSAT ground stations shall be ≤ 10^{-5}	PLR_4.2.2.1 PLR_6.2	Comm MOS/GDS
MDRA_5.12.3.7	S-Band Bit Error Rate to TDRSS	The S-band downlink bit error rate to TDRSS ground stations shall be ≤ 10^{-5}	PLR_4.2.2.1 PLR_6.3	Comm MOS/GDS
MDRA_5.12.3.8	RF, Data Modulation and Encoding for Normal Operations to NEN/KSAT	The S-band downlink rate 256 kbps to NEN and KSAT sites shall utilize BPSK digital modulation scheme, RHCP, the CCSDS data format, and convolutional code (Rate 1/2). Complete RF characteristics for IRIS shall be specified in the RF ICD, A101-RQ-09-0444.	PLR_4.2.2.1 PLR_6.2	Comm MOS/GDS Sub_Doc
MDRA_5.12.3.9	RF, Data Modulation and Encoding for TDRSS Operations	The S-band downlink rate of 4 kbps to TDRSS shall utilize BPSK digital modulation scheme, RHCP, the CCSDS data format, and convolutional code (Rate 1/2). Complete RF characteristics for IRIS shall be specified in the RF ICD, A101-RQ-09-0444.	PLR_4.2.2.1 PLR_6.3	Comm MOS/GDS Sub_Doc
MDRA_5.12.3.10	Coherent Mode of Operation	The transponder shall provide a coherent mode of operation so that 2-way Doppler tracking data can be generated by the ground antenna.	PLR_4.2.2.1 PLR_6.2	Comm MOS/GDS

Req ID	Section Title	Project Level 2 Requirements	Trace From	Trace To
MDRA_5.12.4	**X-Band Downlink**	An X-band downlink shall be provided to support Observatory stored science and housekeeping telemetry transfer to the ground station.	PLR_4.2.2.1	Comm MOS/GDS C&DH
MDRA_5.12.4.1	Link Margin	Link margin on the X-band downlink to NEN and KSAT sites shall be ≥ +3 dB. The limiting antenna aperture is the 7.3m antenna at the Svalbard Ground Station operated by KSAT.	PLR_4.2.2.1 PLR_6.2	Comm MOS/GDS
MDRA_5.12.4.2	Availability	The X-band telemetry link availability to NEN and KSAT sites, averaged over any year, shall be >= 99%.	PLR_4.2.2.1 PLR_6.2	Comm MOS/GDS
MDRA_5.12.4.3	X-Band Data Rate	The X-band downlink data rate shall be 13.1 Mbps. This data rate is the "information" rate and does not reflect any encoding overhead. The addition of rate 7/8 Low Density Parity Check (LDPC) encoding will result in a 15 Mbps transmission rate.	PLR_4.2.2.1 PLR_4.4.1	Comm MOS/GDS C&DH
MDRA_5.12.4.4	X-Band Bit Error Rate	The X-band downlink bit error rate to the NEN and KSAT ground stations shall be ≤ 10^{-7}.	PLR_4.2.2.1 PLR_6.2	Comm MOS/GDS
MDRA_5.12.4.5	RF and Data Modulation and Encoding	The X-band downlink shall utilize OQPSK digital modulation scheme, RHCP, the CCSDS data format, and rate 7/8 Low Density Parity Check (LDPC) Code. Complete RF characteristics for IRIS shall be specified in the RF ICD, A101-RQ-09-0444.	PLR_4.2.2.1 PLR_6.2	Comm MOS/GDS Sub_Doc
MDRA_5.13	**Environments**			
MDRA_5.13.1	Environments and Verification	The IRIS Observatory shall be designed and verified to survive without performance degradation to the environmental conditions as specified in the Observatory Environmental Reqs (A101-RQ-09-0312). Environmental verification shall be accomplished as specified in the Verification Plan for the IRIS Observatory (A101-RQ-09-0311).	PLR_4.2.2.2	IOP,IEB SC, ACS Obs_Therm Sub_Doc SC_Pwr
MDRA_5.13.2	Internal and External Surface Charging	The IRIS Observatory shall be designed to dissipate collected charge on internal and external surfaces consistent with NASA Handbook 4006, Low Earth Orbit Spacecraft Charging Design Handbook.	PLR_4.2.2.1	IOP, IEB SC, Obs_Therm SC_Pwr

Req ID	Section Title	Project Level 2 Requirements	Trace From	Trace To
MDRA_5.13.3	Contamination	Contamination of sensitive portions of the Observatory by condensables and particulates shall not prevent the mission from meeting its requirements. The IRIS Contamination Control Plan (A101-PN-09-0363) establishes contamination allowances, describes the control strategy, and flows implementation requirements to the Instrument Specification (A101-RQ-09-0261), Spacecraft Specification (A101-RQ-09-0264), and Launch Vehicle IRD (A101-RQ-09-0267).	SMEX MAR 410-RQMT-0036	IOP SC Sub_Doc
MDRA_6.0	**LAUNCH VEHICLE REQUIREMENTS**	The Launch Vehicle shall be compatible with requirements specified in the Launch Vehicle Interface Requirements Document, A101-RQ-09-0267.	PLR_4.3.1 PLR_4.3.3 PLR_4.3.4	IOP SC Sub_Doc
MDRA_7.0	**MISSION OPERATIONS AND GROUND DATA SYSTEM REQUIREMENTS**		PLR_4.2.2.1	
MDRA_7.1	**Critical Events**	The IRIS mission critical events are separation, solar array deployment, the Telescope Assembly top door opening, and the power-up of major components or subsystems. Real-time telemetry monitoring of these events shall be performed, consistent with NASA GSFC-STD-1000 (GOLD rules), Rev E, rule 1.14.	NASA GSFC-STD-1000E GOLD rules	MOS/GDS
MDRA_7.2	**Eclipse Season Operation**	Operation of the Instrument during eclipse season will be performed only if sufficient power and financial resources exist. For planning purposes, the Instrument is assumed OFF during the 3 month winter eclipse season (assumes nominal injection).	PLR_4.2.2.1	MOS/GDS JSOC-IOC JSOC-SDP Obs_Therm SC_Pwr
MDRA_7.3	**Ground Stations**	The Ground Station implementation and operation shall support IRIS mission implementation and operation requirements through all phases of mission life.	PLR_4.4.1	MOS/GDS
MDRA_7.3.1	L&EO and Contingency Ground Stations	Additional NEN ground stations and TDRSS shall provide S-band command uplink and telemetry downlink, a real-time housekeeping telemetry stream to the MOC, and tracking support for L&EO and contingency operations.	PLR_4.4.1	MOS/GDS

Req ID	Section Title	Project Level 2 Requirements	Trace From	Trace To
MDRA_7.3.2	Normal Ops Ground Station	The IRIS Mission primary ground station(s) shall support data S & X-band data downlink, S-band command uplink, and coherent mode tracking data.	PLR_4.4.1	MOS/GDS
MDRA_7.3.3	Local Data Storage	The ground station shall employ and demonstrate a data distribution implementation with sufficient storage to support science data retransmissions for a 7 day period.	PLR_4.4.1	MOS/GDS
MDRA_7.4	**Uplink Characteristics**	The ground system shall support S-band frequency for command, housekeeping and science telemetry, and tracking functions per MDRA Communications Requirements.	PLR_4.4.1	MOS/GDS
MDRA_7.4.1	Security	The uplink command path shall include appropriate security measures to prevent the execution of any unauthorized command sequences.	PLR_4.4.1	MOS/GDS C&DH SC_FSW
MDRA_7.4.2	Number of uplinks	The nominal operations concept requires 1 command uplink per day, 5 days a week.	PLR_4.4.1	MOS/GDS
MDRA_7.4.3	Command Volume	The typical daily command volume will be 10-20 kbytes with a maximum uplink volume of 75 kBytes.	PLR_4.4.1	MOS/GDS C&DH
MDRA_7.4.4	Ground Receipt Time	The ground station shall have the capability to insert UTC time into S-band telemetry frames upon arrival at the ground station antenna with 10 msec accuracy; this is in support of clock correlation operations as specified in the IRIS Timing ICD, A101-RQ-10-0770.	PLR_4.4.1	MOS/GDS
MDRA_7.4.5	Command Acceptance	The command link shall utilize the CCSDS command path service protocol with both COP-1 and bypass modes supported.	PLR_4.4.1	MOS/GDS C&DH SC_FSW Sub_Doc
MDRA_7.5	**Downlink Characteristics**	The ground system shall support X-band downlink for housekeeping and science telemetry per MDRA Communications Requirements.	PLR_4.4.1	MOS/GDS
MDRA_7.5.1	Number of Downlinks	When combined with the X-band downlink data rate, the required number of downlink contacts shall be sufficient to meet the Downlink Volume requirement. A typical number of X-band data downlinks will be 13 per day.	PLR_4.4.1	MOS/GDS
MDRA_7.5.2	Downlink Volume	The average daily downlink volume shall be ≥ 60 Gbits per day, excluding eclipse season. As a goal, the data volume will be achievable when the Observatory is rolled for durations up to 3 orbits, affecting 2 station passes.	PLR_4.4.1	Mission Comm MOS/GDS

Req ID	Section Title	Project Level 2 Requirements	Trace From	Trace To
MDRA_7.5.3	Data Capture	The Ground Data System shall capture 95% of downlinked science and housekeeping data. There are no operational provisions anticipated for data retransmission of dumped data that may be corrupted although the spacecraft and ground data system shall maintain this capability.	PLR_4.4.1	MOS/GDS
MDRA_7.6	**Ground Networks**	The NASA Near Earth Network (NEN) and TDRSS shall provide command and telemetry data links from the IRIS Observatory to the MOC and SOC, voice, and tracking data networks that meets the Communications and Ops Concept requirements. KSAT antennas will provide science and engineering downlink, tracking information, but will not provide commanding.	PLR_4.4.1	MOS/GDS
MDRA_7.7	**Data Delivery to JSOC**	Stored housekeeping data shall be received at the Joint Science Operations Center Instrument Operations Center (JSOC-IOC) and stored science data shall be received at the JSOC Science Data Processing Facility (JSOC-SDP) within 6 hours after the station pass is complete. A subset of housekeeping data shall be provided by the MOC to JSOC-SDP as defined in the MOC-SOC ICD. JSOC-SDP processed science data shall be made available to JSOC-IOC as defined in the MOC-SOC ICD.	PLR_4.4.1	MOS/GDS JSOC-SDP
MDRA_7.8	**Data Formats**	The Ground Data System shall comply with the CCSDS data format as specified in the CMD & Tlm Format ICD (A101-RQ-09-0364).	PLR_4.4.1	MOS/GDS JSOC-IOC JSOC-SDP Sub_Doc
MDRA_7.9	**MOC Requirements**	The Mission Operations Center (MOC) shall operate the Observatory and manage the ground data system.	PLR_4.4.2	MOS/GDS
MDRA_7.9.1	Real-Time GSE	The MOC shall provide a real-time command and control system for the commanding the spacecraft and displaying real-time telemetry.	PLR_4.4.2	MOS/GDS
MDRA_7.9.2	Offline GSE	The IRIS Project shall provide a system for the storage and trending analysis of Observatory housekeeping data to be used by the MOC and JSOC.	PLR_4.4.2	MOS/GDS
MDRA_7.9.3	Mission Planning and Scheduling	The MOC shall provide a system for generating command uploads to the spacecraft. This system shall integrate observing command timelines from the JSOC-IOC, spacecraft commands required to facilitate operations, and manage ground station scheduling.	PLR_4.4.2	MOS/GDS

Req ID	Section Title	Project Level 2 Requirements	Trace From	Trace To
MDRA_7.9.4	Flight Dynamics	Flight Dynamics/GDS shall provide orbit determination services and applicable data on a best effort basis for the purpose of spacecraft acquisition/communication by ground and space network antennas. Stations will use NORAD TLEs after L+30 days. . LM will provide the ACS sensor calibration support capability.	PLR_4.4.2	MOS/GDS
MDRA_7.9.5	Autonomy	The MOC shall possess sufficient autonomy to allow basic fault detection of Observatory real-time and stored housekeeping data and provide notification to the Flight Ops Team; specific fault detection responsibilities are detailed in the Fault Protection Requirements Document, A101-RQ-09-0443.	PLR_4.4.2	MOS/GDS Sub_Doc
MDRA_7.9.6	S/C Clock Management	The MOC and ground data system shall maintain time correlation between the spacecraft clock, the instrument clock, and UTC to 0.5s with a 10 msec accuracy.	PLR_4.4.2 Derived from IRIS Project Plan, Req ID # for coordinated observations	MOS/GDS
MDRA_7.9.7	Flight Ops Team Response to Critical Anomalies	The Flight Ops Team shall respond to critical anomalies by executing a real-time command pass within 6 hours after receipt of a paging system notification. Critical anomalies are conditions where the autonomous safehold mode has failed to establish a power positive and thermally safe environment for the Observatory. Conditions will be described in the Fault Protection ICD, A101-RQ-09-0443.	PLR_4.4.2	MOS/GDS
MDRA_7.10	**SOC Requirements**	The SOC consists of the Joint Science Operations Center, Science Data Processing Center (JSOC-SDP), and the JSOC Instrument Operations Center (JSOC-IOC). JSOC-SDP is located at Stanford University and performs L0.1 ("quick-look") , and L1 science data processing and distribution. JSOC-IOC is located at LMSAL and prepares science observing timelines, coordinates observations with other missions, sends JSOC-SDP housekeeping data products for L1 science procesing, and performs other higher level science data processing.	PLR_4.4.3 PLR_4.4.4	JSOC-SDP - Info Only JSOC-IOP - Info Only

Req ID	Section Title	Project Level 2 Requirements	Trace From	Trace To
MDRA_7.10.1	Mission Planning	The JSOC-IOC shall provide a system for generating observing timelines and other command load files necessary for operation of the instrument; command load files shall be provided to the MOC. Observing cadence shall be managed so that the instrument data volume does not exceed the spacecraft data storage capability and ground data system ability to downlink it.	PLR_4.4.3 PLR_4.4.4	JSOC-IOC
MDRA_7.10.2	Coordinated Observations	The JSOC-IOC shall provide the necessary hardware, software and observing plan to facilitate coordinated science planning operations, consistent with the IRIS Project Plan.	PLR_4.4.3 Derived from IRIS Project Plan, Req ID # for coordinated observations	JSOC-IOC
MDRA_7.10.3	Science Data Processing Facility	The JSOC-SDP shall provide the necessary facility, software, hardware and staff to receive, process, archive and distribute the science data generated by the IRIS Instrument.	PLR_4.4.4	JSOC-SDP
MDRA_7.10.4	Quick-Look Science Data Processing	The "quick-look" science data processing shall be complete and available for use within 6 hours after data receipt at JSOC-SDP.	PLR_4.4.4	JSOC-SDP
MDRA_7.10.5	Permanent Storage	Two copies of science data shall be produced on permanent media. One is retained locally, and the other shall be removed for offsite storage.	PLR_4.4.4	JSOC-SDP
MDRA_7.10.6	High Rate Science GSE for I&T	The high rate science I&T GSE shall have the capability to support testing and evaluation of the Observatory operation and instrument telemetry as part of ground testing. JSOC-SDP provides this capability.	PLR_4.4.4	JSOC-SDP
MDRA_7.10.7	Level 1 Science Data Processing	The JSOC-SDP shall integrate the calibration procedures and data into the Level 1 science data processing.	PLR_4.4.4	JSOC-SDP
MDRA_7.11	**MOS/GDS Testing**	End-to-end testing shall be conducted to verify the compatibility of all ground data system elements with the Observatory and Launch Vehicle as described in the MOS/GDS Verification Plan (A101-PN-09-0448).	PLR_4.4.1	MOS/GDS

- END -