International External Robotic Interoperability Standards (IERIS)

Draft C – February 2018

REVISION AND HISTORY

REV.	DESCRIPTION	PUB. DATE
Draft	Draft Release	04-18-17
Draft A	Major update for September and Checkpoint Review	09-29-17
Draft B	Update based on NASA internal feedback	10-27-17
Draft C	Update based on Industry feedback	02-09-18

PREFACE

INTERNATIONAL EXTERNAL ROBOTIC INTEROPERABILITY STANDARDS (IERIS)

This International External Robotic Interoperability Standards (IERIS) establishes a standard interface to enable on-orbit robotic operations and joint collaborative endeavors utilizing different robotic compatible spacecraft or equipment.

Configuration control of this document is the responsibility of the International Space Station (ISS) Multilateral Coordination Board (MCB), which is comprised of the international partner members of the ISS. The National Aeronautics and Space Administration (NASA) will maintain the International External Robotic Interoperability Standards under Human Exploration and Operations Mission Directorate (HEOMD). Any revisions to this document will be approved by the ISS MCB.

INTERNATIONAL EXTERNAL ROBOTIC INTEROPERABILITY STANDARDS (IERIS)

CONCURRENCE

FEBRUARY 2018

Associate Administrator Human Exploration and Operations NASA	Date
Executive Director, Human Space Programs State Space Corporation “Roscosmos”	Date
Director of Human Spaceflight and Operations European Space Agency	Date
Director General, Space Exploration Canadian Space Agency	Date
Executive Director Japan Aerospace Exploration Agency	Date

TABLE OF CONTENTS

PARAGRAPH **PAGE**

APPENDIX

TABLE

FIGURE

1.0 INTRODUCTION

This International External Robotic Interoperability System Standards is the result of a collaboration by the International Space Station (ISS) membership to establish, interoperable interfaces, terminology, techniques, and environments to facilitate collaborative endeavors of space exploration in cis-Lunar and deep space environments.

Standards that are established and internationally recognized have been selected where possible to enable commercial solutions and a variety of providers. Increasing commonality while decreasing unique configurations has the potential to reduce the traditional barriers in space exploration: overall mass and volume required to execute a mission. Standardizing interfaces reduces the scope of the development effort and allows more focus on performance instead of form and fit.

The information within this document represents a set of parameters enveloping a broad range of conditions, which if accommodated in the system architecture support greater efficiencies, promote cost savings, and increase the probability of mission success. These standards are not intended to specify system details needed for implementation nor do they dictate design features behind the interface, specific requirements will be defined in unique documents.

1.1 GENERAL

This International External Robotic Interoperability Standards is the result of collaboration by the International Space Station membership to establish a standard interface to enable on-orbit robotic operations and joint collaborative endeavors utilizing different robotic compatible spacecraft or equipment.

1.2 PURPOSE AND SCOPE

The purpose of the International External Robotic Interoperability Standards is to provide a set of common design parameters to allow station module, visiting vehicle, and on-orbit relocatable or replaceable unit (ORU) providers to architect and design elements which are compatible with an external robotic system, and vice versa.

The primary goal of this standard is to inform and enable the Deep Space Gateway (DSG) and Deep Space Transport (DST) architectures.

Although the target environment for this standard is the cis-lunar orbital environment it is recognized that the DSG is a proving ground for phase 2 DST missions including the path to Mars and for planetary surface deployable systems. The interfaces defined herein will thus include contamination resistant versions. The standard will not preclude and will facilitate where possible application to earth orbit and commercial applications.

This standard leverages ISS robotic interface heritage and lessons learned, as well as related technology development activities.

This standard does not address DSG internal robotic compatible systems, vehicle to vehicle berthing only interfaces (e.g. ISS CBM (Common Berthing Mechanism)), or vehicle to vehicle berthing compatible docking interfaces (e.g. IDSS-B, [RD-02]).

1.3 RESPONSIBILITY AND CHANGE AUTHORITY

Any proposed changes to this standard by the participating partners of this agreement shall be brought forward to the International External Robotic Interoperability Standards committee for review.

Configuration control of this document is the responsibility of the International Space Station (ISS) Multilateral Coordination Board (MCB), which is comprised of the international partner members of the ISS. NASA will maintain the International External Robotic Interoperability Standards under Human Exploration and Operations Mission Directorate (HEOMD). Any revisions to this document will be approved by the ISS MCB.

1.4 PRECEDENCE

This paragraph describes the hierarchy of document authority and identifies the document(s) that take precedence in the event of a conflict between content. Applicable documents include requirements that must be met. If a value in an applicable document conflicts with a value here, then the system may need to be able to meet both values at different times.

Reference documents are either published research representing a specific point in time, or a document meant to guide work that does not have the full authority of an Applicable document. If a value in this document conflicts with a value in a referenced document, then it should be assumed that the value here was deliberately changed based on new data or a special constraint for the missions discussed.

2.0 DOCUMENTS

2.1 APPLICABLE DOCUMENTS

The following documents include specifications, models, standards, guidelines, handbooks, and other special publications. Applicable documents are levied by programs with authority to control system design or operations. The documents listed in this paragraph are applicable to the extent specified herein. Inclusion of applicable documents herein does not in any way supersede the order of precedence identified in Section 1.4 of this document.

[AD-01]	IASIS	International Avionics Systems Interoperability Standards
[AD-02]	ICSIS	International Communication System Interoperability Standards
[AD-03]	ISPSIS	International Space Power System Interoperability Standards
[AD-04]	ITSIS	International Thermal System Interoperability Standards
[AD-05]	SLS-SPEC-159	Crossprogram Design Specification for Natural Environments (DSNE)
[AD-06]	TBD	International Electromagnetic, Electrostatic, and Bonding Requirements

2.2 REFERENCE DOCUMENTS

The following documents contain supplemental information to guide the user in the application of this document. These reference documents may or may not be specifically cited within the text of this document.

[RD-01]	SLS-ESD 30000	SLS Mission Planners Guide
[RD-02]	IDSS IDD	International Docking System Standard (IDSS) Interface Definition Document (IDD), Revision E, Oct. 2016
[RD-03]	ISO 9409-1	Manipulating industrial robots - Mechanical interfaces – Part 1: Plates

3.0 INTERNATIONAL EXTERNAL ROBOTIC INTEROPERABILITY STANDARDS

3.1 GENERAL

The following subsections describe the classes of external robotics interfaces for the IERIS.

3.1.1 DESCRIPTION

Lessons learned from robotic operations on board the International Space Station (ISS) have identified that the use of a limited number of standardized interfaces would be beneficial for improving efficiency and reducing overall complexity, which are critical considerations for future space exploration robotics.

The goals of the IERIS are:

1. Establish common generic mounting interfaces for all external robotic interface classes. Standardizing interface requirements ensures interchangeability and is consistent with other international standards such as those developed for the manipulation of industrial robots (ISO 9409-1).
2. Maximize use of simple interface designs. IERIS should direct the module/vehicle/payload designers to simple and robust robotic interfaces that have been accepted by the international community.
3. Enable provision of robotic fixture hardware as part of the robotic system if desired.

The IERIS document is divided into several sections to define each of the unique robotic interface classes.

In this document, ORU will be used interchangeably with ORU/Payload to represent both ORU and generic non-ORU payloads.

- Large Fixture Interfaces (Section 4.0)
  Fixtures used for robotic handling of vehicles/modules, large payloads or as robotic bases. Applicable to operations including free flyer capture, relocation and tool handling.
- Small ORU Platform Interfaces (Section 5.0)
  Platforms designed for supporting smaller ORUs that are mounted to a vehicle/module.
- Large ORU Platform Interfaces (Section 6.0)
  Platforms designed for supporting larger ORUs that are mounted to a vehicle/module.
- Dexterous Fixture Interfaces (Section 7.0)
  A small dexterous interface used to robotically manipulate smaller payloads/ORUs.

- ORU Direct Interfaces (Section 8.0)
  An interface that directly mounts to an ORU and vehicle/module without an intermediary platform.

Within IERIS, the use of Small and Large with respect to robotic interfaces is meant to distinguish the magnitude of the loads expected to be imparted at the interface. These loads may be derived from a combination of mass and geometry of the attached payloads. Therefore, the selection of large or small interfaces will be determined by the user's needs on a basis of loads, mass, and geometric constraints.

Requirements and features of each interface class are divided into common and specific sections. The common sections include interface descriptions, requirements, and verification methodologies consistent across the interface class. The specific sections include descriptions and requirements that are particular to a hardware interface implementation (e.g. grapple fixture, wedge, etc.) that cannot be captured in the common section (such as loads, geometry details). Wherever possible, IERIS seeks to maximize the commonality between the specific hardware implementations.

A sixth interface class may be added to IERIS in the future for interfaces that deal with the direct mounting of Large ORUs/Payloads. This will be dependent on the results of a platform vs direct mount key trade study for large ORUs that is currently under development **<TBR 3-1>**. A summary of key trade off studies is presented in Appendix F:.

A distinction must be made between interface user and interface developer level requirements. User level requirements are those that are of interest to parties who intend to mount an external robotics interface onto hardware. User level requirements can include interface loads, mounting details or fixture clearance approach envelopes. These requirements comprise the majority of the main body of IERIS. Developer level requirements can include details that are pertinent to the design of specific implementations of external robotic interface classes. These details can include geometric, structural, thermal details of particular components of the interface. These developer level requirements can be extensive for each specific interface specified in IERIS, and therefore are not to be included in the main body of this document. Where applicable, IERIS will refer to external developer requirement documents. Alternatively, developer requirements that do not currently reside in an external document will be collected in Appendix E:.

The document is expandable and may be updated to include sections that are pertinent to future robotics interface topics such as Human-Machine Interfaces (HMIs) or robotic fluid transfer/refueling interfaces for on-orbit servicing.

3.1.2 COMMON MOUNTING INTERFACE PLANES

The subsequent sections describe common mounting interface planes for each external robotic interface class.

Rationale: Common mounting interfaces are defined for each interface class so that module and ORU providers can have a common set of requirements at the mounting plane. These will apply to all interfaces of that class, unless otherwise superseded by requirements defined in the specific implementation section.

3.1.2.1 LARGE FIXTURE INTERFACE

The *common large fixture mounting interface plane* is the interface located between the large fixture and the vehicle/module. The large fixture will interface with a large fixture compatible End Effector (EE) or tool. A conceptual example of the large fixture and corresponding mounting interface is depicted in Figure 1.

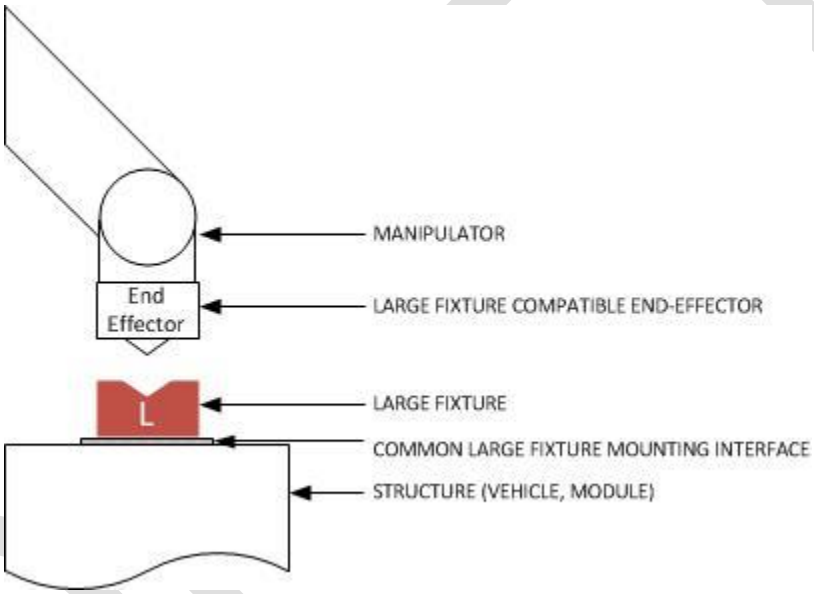

FIGURE 1 EXAMPLE OF A LARGE FIXTURE AND THE COMMON MOUNTING INTERFACE PLANE

3.1.2.2 SMALL ORU PLATFORM INTERFACES

For the small ORU platform, two common interface mounting planes can be defined.

- The *common small platform mounting interface plane* is the mounting plane between the ORU and the small platform.
- The *common small receptacle mounting interface plane* is the mounting plane located between the platform and the vehicle/module.

A conceptual example of the small ORU platform and corresponding mounting interfaces is depicted in Figure 2. The small platform is manipulated by a dexterous fixture, which is included in the figure for reference.

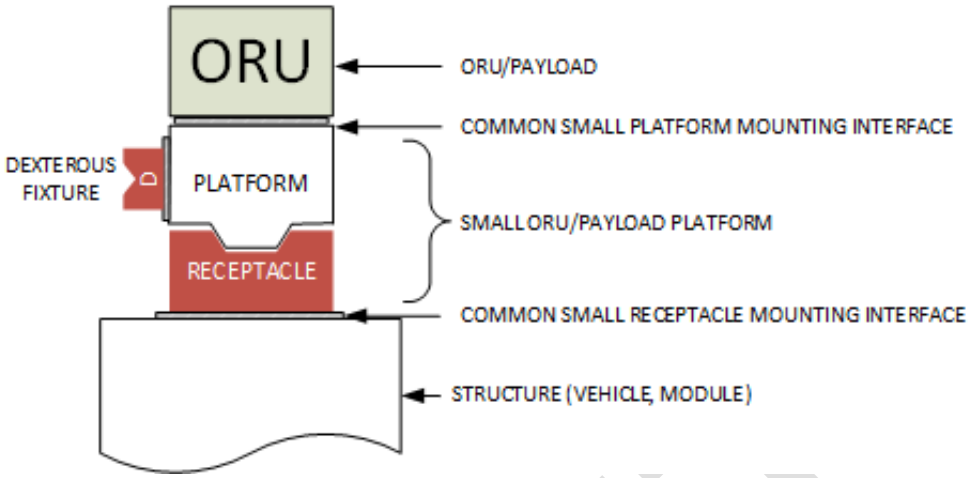

FIGURE 2 EXAMPLE OF A SMALL ORU PLATFORM AND COMMON MOUNTING PLANES

3.1.2.3 LARGE ORU PLATFORM INTERFACE

For the large ORU platform two common interface mounting planes can be defined.

- The *common large platform mounting interface plane* is the mounting plane located between large ORU and the large platform
- The *common large receptacle mounting interface plane* is the mounting plane located between the large platform and the vehicle/module.

A conceptual example of the large ORU platform and corresponding mounting interfaces is depicted in Figure 3. The large platform is manipulated by a dexterous fixture, which is included in the figure for reference.

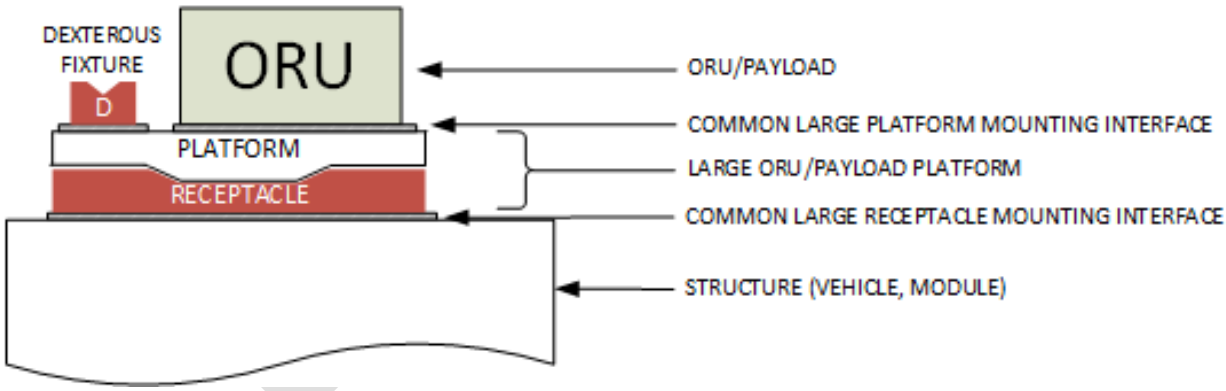

FIGURE 3 EXAMPLE OF A LARGE ORU PLATFORM AND COMMON MOUNTING PLANES

3.1.2.4 DEXTEROUS FIXTURE INTERFACE

The *common dexterous fixture mounting interface plane* is the mounting plane located between the dexterous fixture and the vehicle/module or ORU. The dexterous fixture will interface with a dexterous fixture compatible EE. A conceptual example of the large fixture and corresponding mounting interface is depicted in Figure 4.

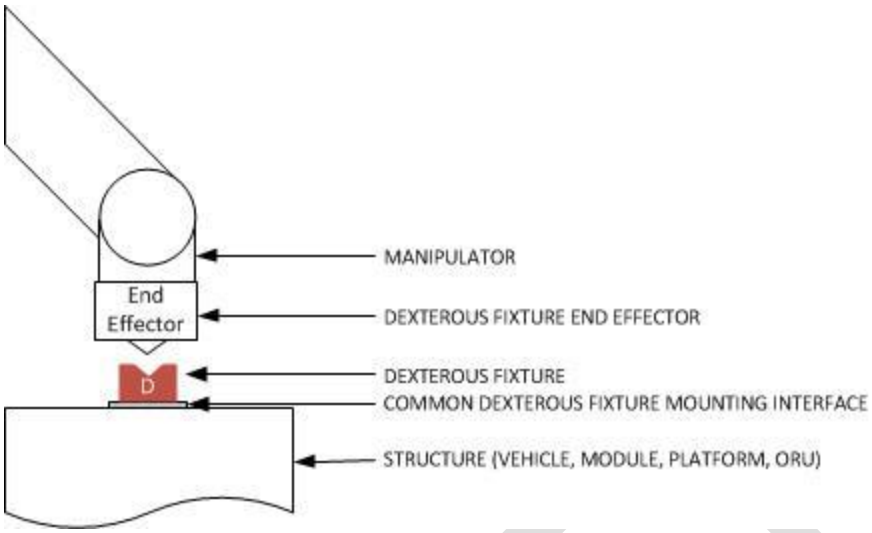

FIGURE 4 EXAMPLE OF A DEXTEROUS FIXTURE AND COMMON MOUNTING INTERFACE PLANE

3.1.2.5 SMALL ORU DIRECT INTERFACE

For the ORU direct interface two specific interface mounting planes can be defined.

- The *specific mate/demate mounting interface plane* is the mounting plane between the ORU and the mate/de-mate structure.
- The *specific receptacle mounting interface plane* is the mounting plane between the mate/demate receptacle and the vehicle/module.

A conceptual example of the ORU direct interface is depicted in Figure 5. The direct interface is manipulated by a dexterous fixture, which is included in the figure for reference.

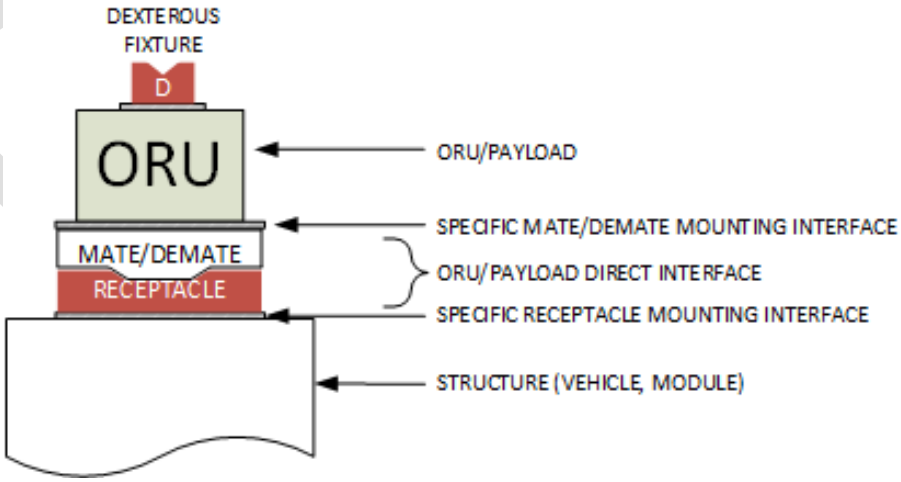

FIGURE 5 EXAMPLE OF AN ORU DIRECT INTERFACE AND COMMON MOUNTING PLANES

3.1.2.6 IERIS ROADMAP

The organization of IERIS is represented pictorially in Figure 6.

Each specific implementation of each interface class is based on a set of common requirements defined at the interface plane. Details on specific implementations of interface classes can be found in the sections detailed in the figure.

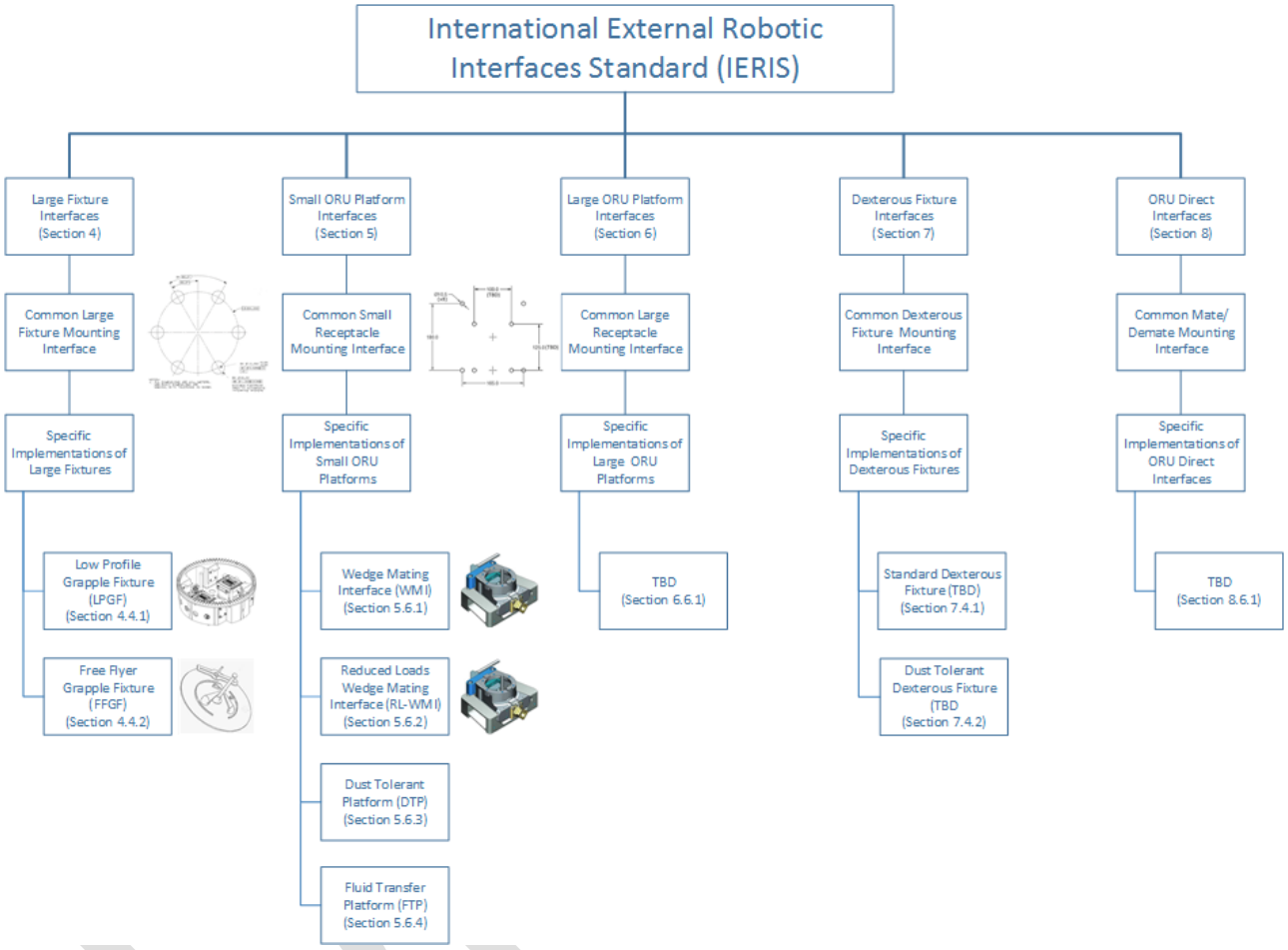

FIGURE 6 IERIS ROADMAP

3.1.2.7 INTERFACE SUMMARY

An overview of external robotic interface classes is presented conceptually in Figure 7.

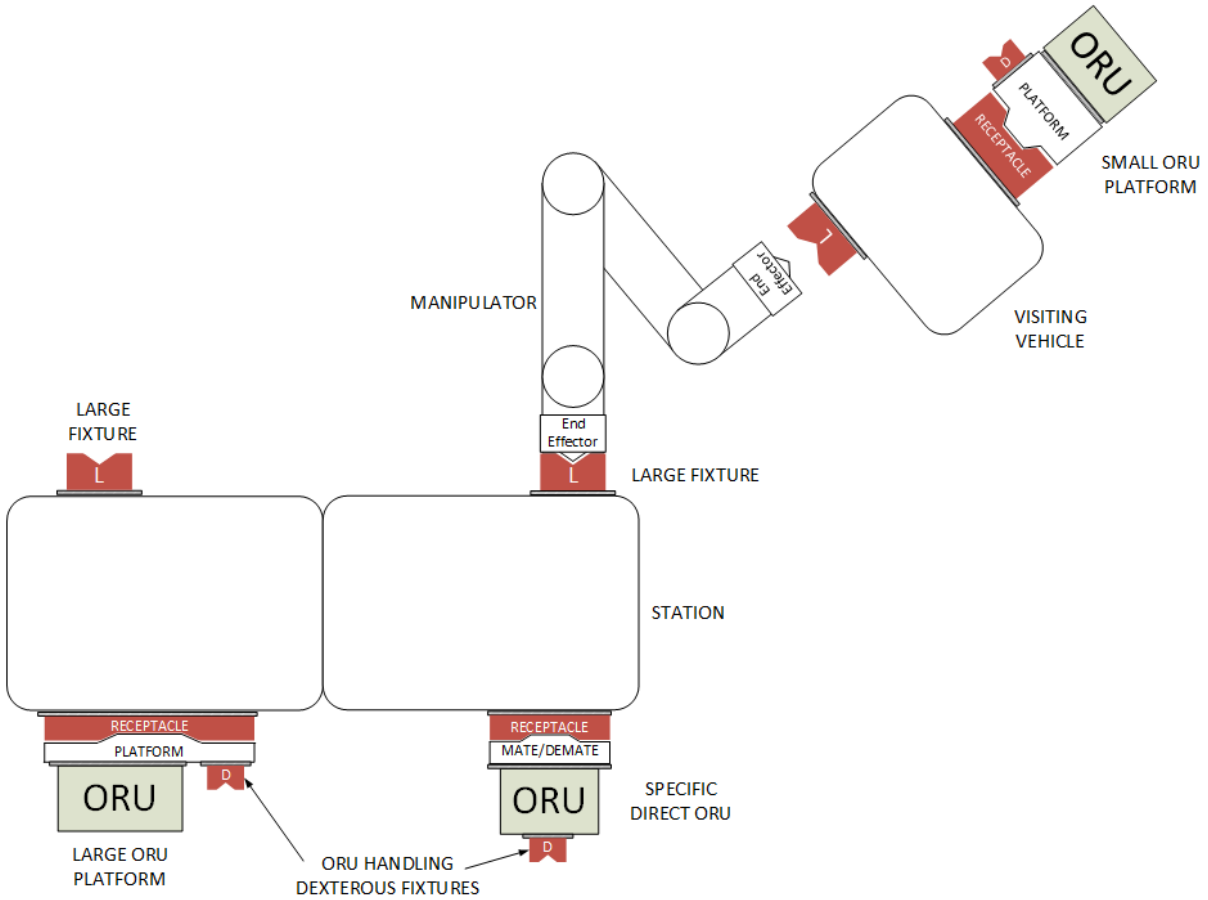

FIGURE 7 OVERVIEW OF INTERFACE CLASSES AND COMMON MOUNTING PLANES FOR A NOTIONAL STATION

3.1.3 STANDARD OPERATIONS REFERENCE FRAMES

For all robotics interfaces (large fixtures, dexterous fixtures, ORU interfaces, etc.), there will be two standard operation frames that will be aligned at the interface plane. The operations coordinate system on the manipulator side will be oriented such that the +x-axis is aligned in the mating direction, and the +z-axis is aligned such that it points away from the interface alignment sensor (where applicable). The y-axis is oriented to complete the right-handed Cartesian system. When no alignment sensor is present, or if the sensor is installed along the x-axis, the orientation of the operations frame will be based on the orientation of the passive (stationary) side of the interface. Figure 8 depicts a Standard Operations (SO) coordinate system (CS) for a conceptual manipulator end effector.

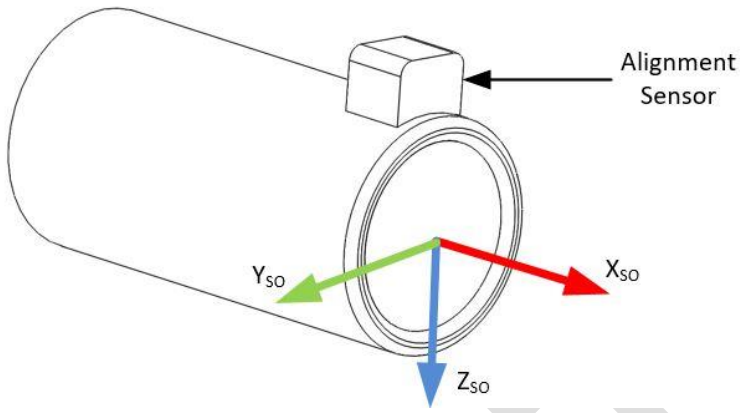

FIGURE 8 STANDARD OPERATIONS COORDINATE SYSTEM

Similarly, a standard operations frame will be located on the stationary half of the mating interface such that the two coordinate systems will be coincident when the interfaces are fully mated. If no alignment feature is present, or if the feature is centered on the x-axis, then the coordinate system will be aligned with the fixture mounting plane. It is recommended that that an alignment reference marking be used to indicate the direction of the z-axis on the stationary interface. Figure 9 depicts an example of a stationary fixture with a mating coordinate system aligned with the EE standard operations coordinate system from Figure 8. The mating interface coordinate systems are defined in the specific sections of each fixture class within the standard.

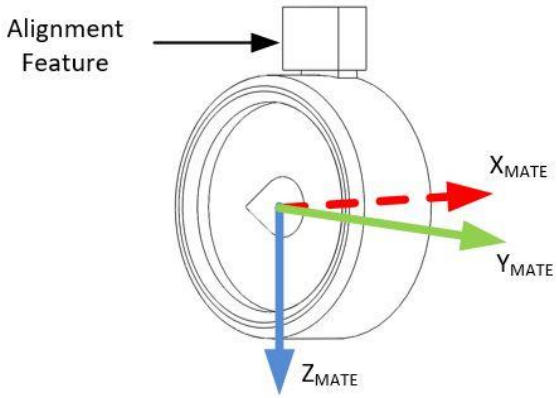

FIGURE 9 STANDARD OPERATION MATING FRAME

3.1.4 ENGINEERING UNITS OF MEASURE

All linear dimensions are in millimeters and all angular dimensions are in degrees. Unless otherwise specified, the dimensional tolerances shall be as follows:

- xx implies xx ± 1 mm
- xx.x implies xx.x ± 0.5 mm
- xx° implies xx° ±30’

3.2 INTERFACES

Unless otherwise stated, the International Avionics System Interoperability Standards IASIS [AD-01], the International Communication System Interoperability Standards ICSIS [AD-02], the International Space Power System Interoperability Standards ISPSIS [AD-03], the International Thermal Interoperability Standards ITIS [AD-04], the Cross-Program Design Specification for Natural Environments (DSNE) [AD-05], and the International Electromagnetic, Electrostatic, and Bonding Requirements [AD-06] are applicable to all external robotic interfaces.

DSNE [AD-05] defines natural environments for Earth orbit, lunar orbit and lunar surface operations. Not all interfaces defined herein are qualified for all operational environments. Interfaces that are intended to support lunar surface operations are identified as dust tolerant within IERIS.

4.0 LARGE FIXTURE INTERFACE

4.1 GENERAL

The large fixture interface class is comprised of fixtures that support robotic handling of large payloads/vehicles/modules or that can be used as robotic bases. These fixtures are applicable to operations including free flyer capture, relocation and tool handling.

The large fixture interface family share a common large fixture mounting interface plane (Figure 1). This establishes a standard interface for both the low profile grapple fixtures (LPGF) and free flyer grapple fixtures (FFGF).

From the contingency release trade (F-1), it has been recommended that the contingency release capability of the large fixture interfaces should be incorporated into the manipulator end-effector, rather than in the fixture, to reduce overall system mass.

Details and requirements pertaining to the specific large fixture interface implementations are detailed in sections below.

Common and specific interface requirements are based on ISS heritage and represent best available information at the time of document release. Requirements are expected to evolve as the DSG design matures.

4.1.1 COMMON INTERFACE DESCRIPTION

The common large fixture mounting interface establishes a generic mounting interface standard for large fixtures. The goal is to furnish the module/vehicle designers with the simplest possible mounting interface in a bid to develop robotic fixture hardware as part of the total robotic system architecture.

4.1.2 COMMON INTERFACE FUNCTIONS

The common large fixture interface shall:

1. Support mechanical and structural attachments to the user
2. Provide an electrical bonding capability for the user
3. Provide manipulator and EVA access to interface attachments and connections

4.2 COMMON REQUIREMENTS

4.2.1 COORDINATE SYSTEMS

The common Large Fixture Mounting (LFM) coordinate system is defined in Figure 10. An overview and description of the coordinate system is provided in Table 4-1.

Not all large fixtures will have a dedicated off-axis target. Alternatively, the large fixture mounting coordinate system may be aligned with a common location pin hole. The location pin hole center shall be aligned with the $-Z_{LFM}$ axis vector.

Rationale: For consistency, the LFM coordinate system is aligned with the standard operations coordinate system (3.1.3) when mated.

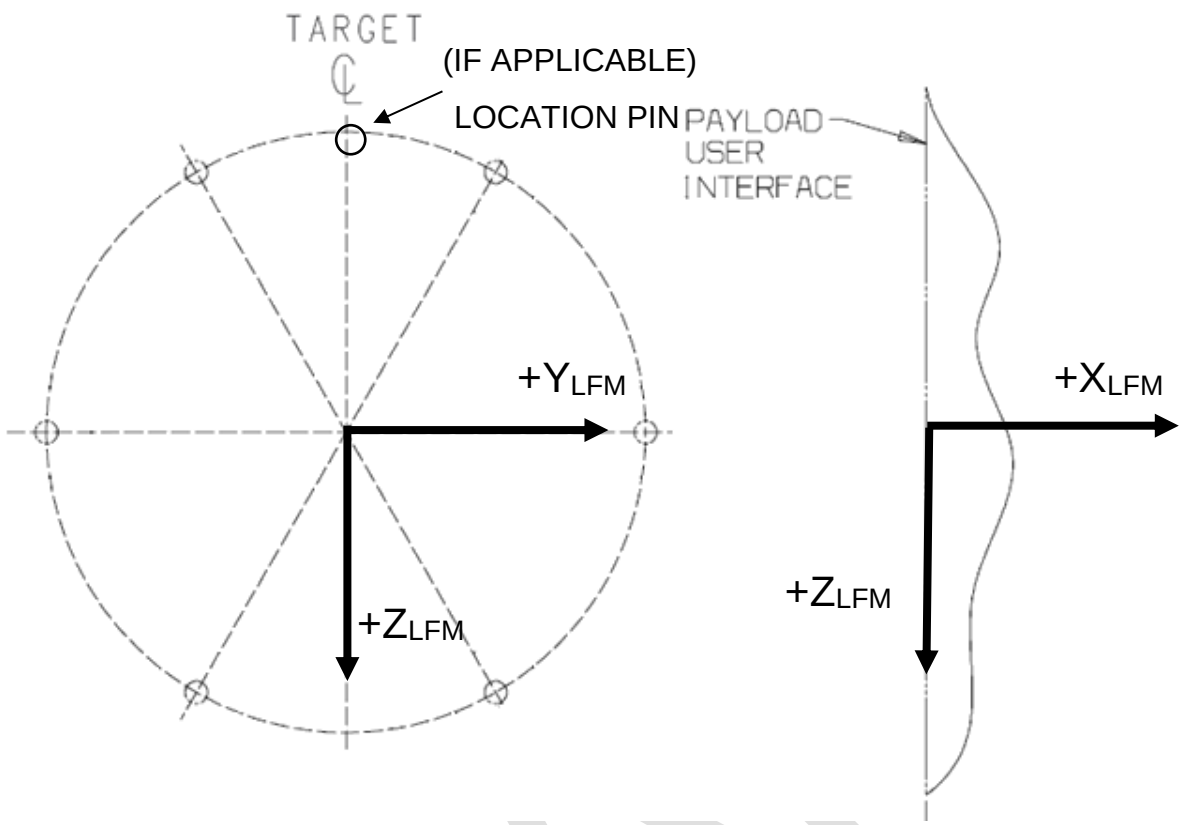

FIGURE 10 COMMON LARGE FIXTURE MOUNTING COORDINATE SYSTEMS

TABLE 4-1 COORDINATE SYSTEM DESCRIPTION FOR COMMON LARGE MOUNTING INTERFACE

Name	Symbol	Position	Orientation	Purpose
Common large fixture mounting interface coordinate system.	X_{LFM}, Y_{LFM}, Z_{LFM}	Center of bolt pattern	Aligned nominally with robotic end effector operations frame $+X_{LFM}$: Normal to mounting plane and away from the large fixture (towards structure) $+Y_{LFM}$: Completes the right-handed coordinate system $+Z_{LFM}$: Away from centerline of intended large fixture target or fixture alignment aid.	Description of large fixture mounting coordinate system

4.2.2 ENVELOPES

4.2.2.1 FIXTURE ENVELOPE

The maximum envelope occupied by a large fixture installed on the mounting interface is defined in Figure 11.

Rationale: This volume envelopes all specific implementations of Large Fixtures documented in the IERIS.

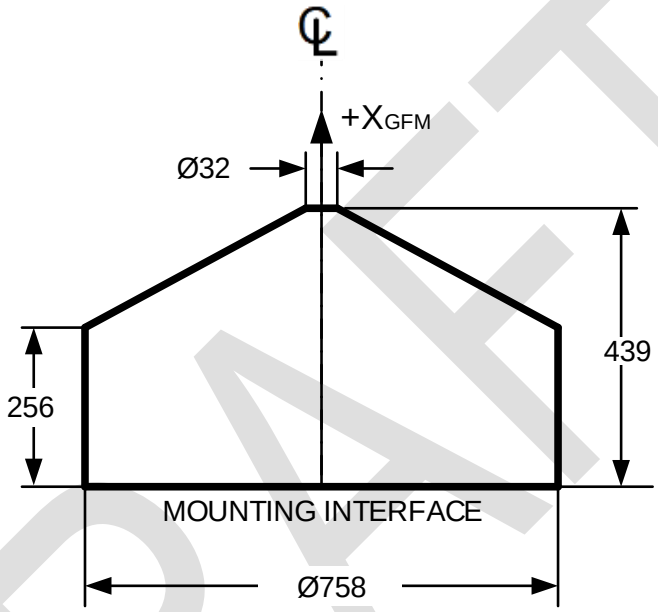

Note:
All linear dimensions are in mm

FIGURE 11 LARGE FIXTURE MAXIMUM ENVELOPE

4.2.2.2 CLEARANCE APPROACH ENVELOPE

The manipulator approach envelope to large fixtures are defined in the specific sections 4.4.1.2.1.1 (LPGF) and 4.4.2.2.1.1 (FFGF).

4.2.3 MECHANICAL INTERFACE

4.2.3.1 MOUNTING BOLT HOLE PATTERNS

The mounting bolt hole patterns and interface details for large fixtures are defined in Figure 12. Access is required to the rear of the interface for mounting fasteners.

Rationale: The bolt pattern presented is a heritage mounting interface that has been used on the Shuttle and the International Space Station Programs.

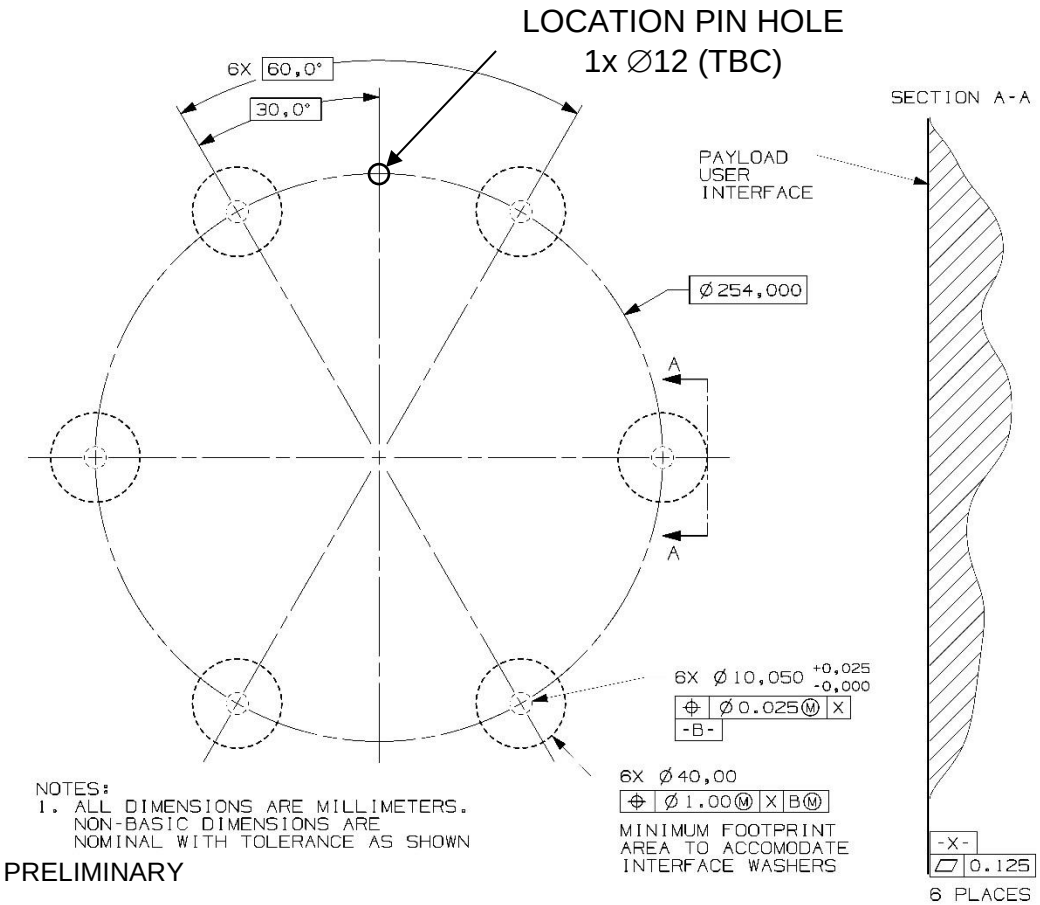

FIGURE 12 LARGE FIXTURE MOUNTING BOLT HOLE PATTERNS

4.2.4 STRUCTURAL INTERFACE

4.2.4.1 MOUNTING INTERFACE LOADS

The common large fixture to vehicle interface shall meet all performance requirements while being subjected to the robot arm loads defined in Table 4-2.

NOTE: These loads represent the maximum expected loads for all large fixtures. Specific implementations of large fixtures may be rated for lower loads.

Rationale: The specified loads bound the worst-case loads expected to be exerted by the base of a DSG manipulator.

TABLE 4-2 COMMON LARGE FIXTURE MOUNTING LOADS <TBR 4-2>

Torsion Moment (about X_{LFM})	**Bending Moment (about axis perpendicular to X_{LFM})**	**Shear Load** (perpendicular to X_{LFM})	**Axial Load** (along X_{LFM})
3100 Nm (TBR)	3100 Nm (TBR)	2000 N (TBR)	1000 N (TBR)
Notes: a) Forces and moments will be applied simultaneously. b) Forces and moments are applicable for any direction c) Shear force is applied in a plane 152 mm above (+X_{LFM}) mounting interface plane			

4.2.4.2 MOUNTING INTERFACE STIFFNESS

The user shall provide a stiffness at the large fixture mounting interface to support robotic operations.

The minimum rotational stiffness about X, Y, and Z shall be 2e6 Nm/rad <TBR 4-7>.

Rationale: The mounting interface stiffness for large fixtures must be sufficiently stiff to limit oscillations that could affect the manipulators ability to perform operations at the end-effector.

4.3 VERIFICATION

TBD

4.4 SPECIFIC LARGE FIXTURE INTERFACES

4.4.1 LOW PROFILE GRAPPLE FIXTURE INTERFACE

4.4.1.1 GENERAL

The Low Profile Grapple Fixture (LPGF) is a robotics interface suitable for use as a robotic base or as a module or payload grasp fixture for relocation purposes. The LPGF is not suitable for use in free flyer capture operations where a large capture envelope is required by the manipulator.

4.4.1.1.1 LPGF DESCRIPTION

The LPGF provides the User with on-orbit mechanical, structural, and electrical interfaces to a manipulator base or tip. The general configuration of the LPGF is shown in Figure 13.

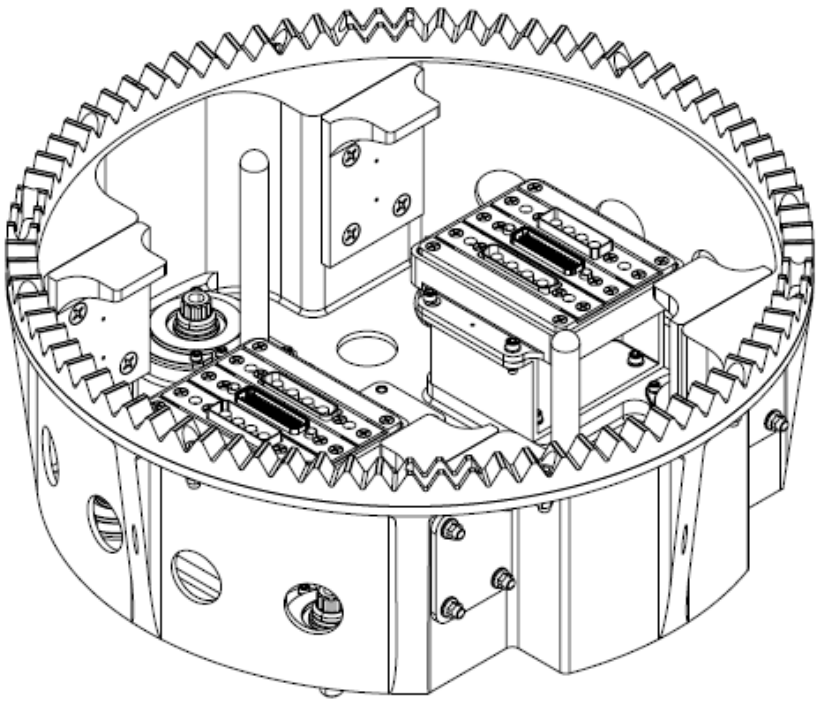

FIGURE 13 LPGF (INTERFACE TO ROBOT END EFFECTOR)

NOTES:

1. Electrical architecture and umbilical shown are notional (placeholder only; design not completed)
2. Mass optimization not performed
3. Coarse alignment guides are preliminary

4.4.1.1.2 COORDINATE SYSTEMS

The LPGF Coordinate System is defined in Figure 14.

Rationale: For consistency, the LPGF coordinate system is aligned with the standard operations coordinate system (3.1.3), and the common LFM coordinate system (4.2.1) when mated.

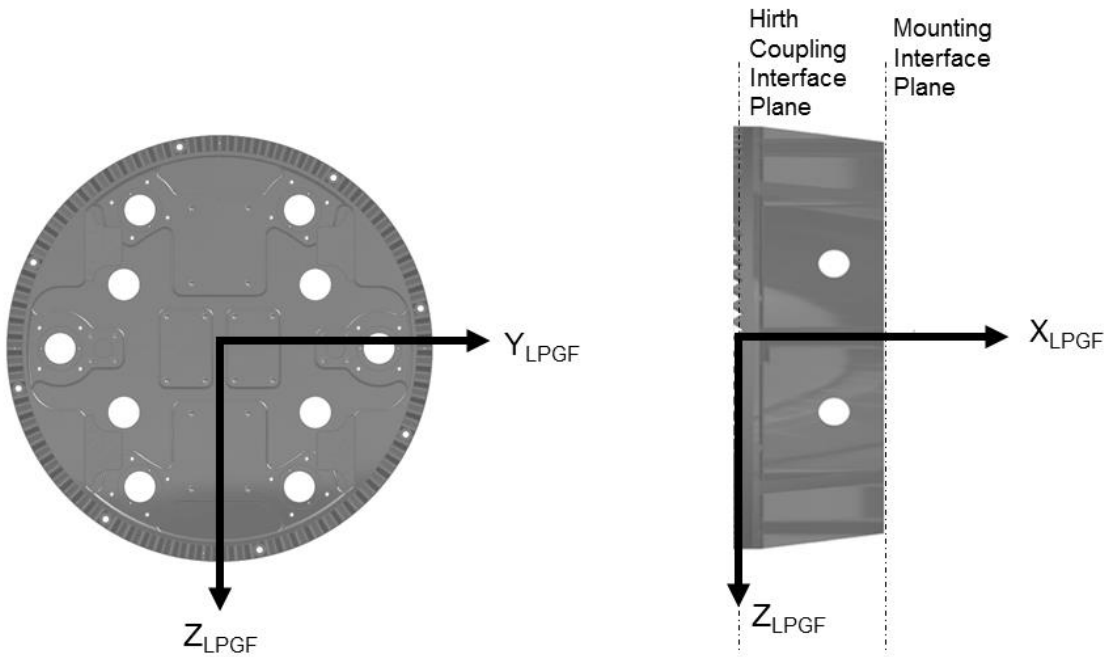

FIGURE 14 LPGF COORDINATE SYSTEM

TABLE 4-3 LPGF COORDINATE SYSTEM DESCRIPTION

Name	Symbol	Position	Orientation	Purpose
Low Profile Grapple Fixture Coordinate System	X_{LPGF}, Y_{LPGF}, Z_{LPGF}	Center of Hirth coupling on pitch plane of coupling teeth.	$+X_{LPGF}$: Normal to hirth coupling interface plane along the centerline of LPGF, and directed from the Origin toward the mounting interface plane. $+Y_{LPGF}$: Completes the right-handed coordinate system $+Z_{LPGF}$: Perpendicular to X_{LPGF}. When installed on its mounting interface, Z_{LPGF} is parallel with Z_{LFM} as defined in section 4.2.1	Description of the LPGF interface to manipulator end-effector.

4.4.1.1.3 LPGF FUNCTIONS

LPGF is the robotic structural interface to a spacecraft, tool or payload. It features:

1. Engagement surfaces that interface with complementary mating surfaces on a large manipulator end-effector to react operational loads.
2. Receptacle connectors **<TBD 4-2>** to allow the User to access electrical signals (power, data and video as desired) on a manipulator tip-mounted tool or payload or transfer manipulator power and control signals from spacecraft through the manipulator.
3. An alignment target to support situational awareness during the engagement/disengagement operations.

4.4.1.2 REQUIREMENTS

4.4.1.2.1 ENVELOPES

4.4.1.2.1.1 CLEARANCE APPROACH ENVELOPE

The LPGF clearance approach envelope is defined in Figure 15. The approach envelope shall be kept clear of intrusions. Intrusions into the approach envelope's keep out zone may result in impact and contact loads with the manipulator during operations.

The LPGF clearance approach envelope includes consideration for wrist cluster sweep. No clearance approach considerations for specific manipulator tools have been included at this time. Special consideration is also required for the case of large payloads that may be stowed on a LPGF as they will need to ensure that sufficient clearances exists relative to surrounding structure during approach.

Rationale: It is desired to maintain a minimum of 75 mm clearance between the manipulator and adjacent structure when approaching an LPGF. The LPGF approach envelope is based on a 75 mm clearance envelope outside of the mechanical sweep of the manipulator wrist cluster volume while considering a range of possible configurations. The preliminary manipulator wrist cluster was swept through ±180 degrees on the WR joint and ± 85 degrees on the WY joint to derive the envelope.

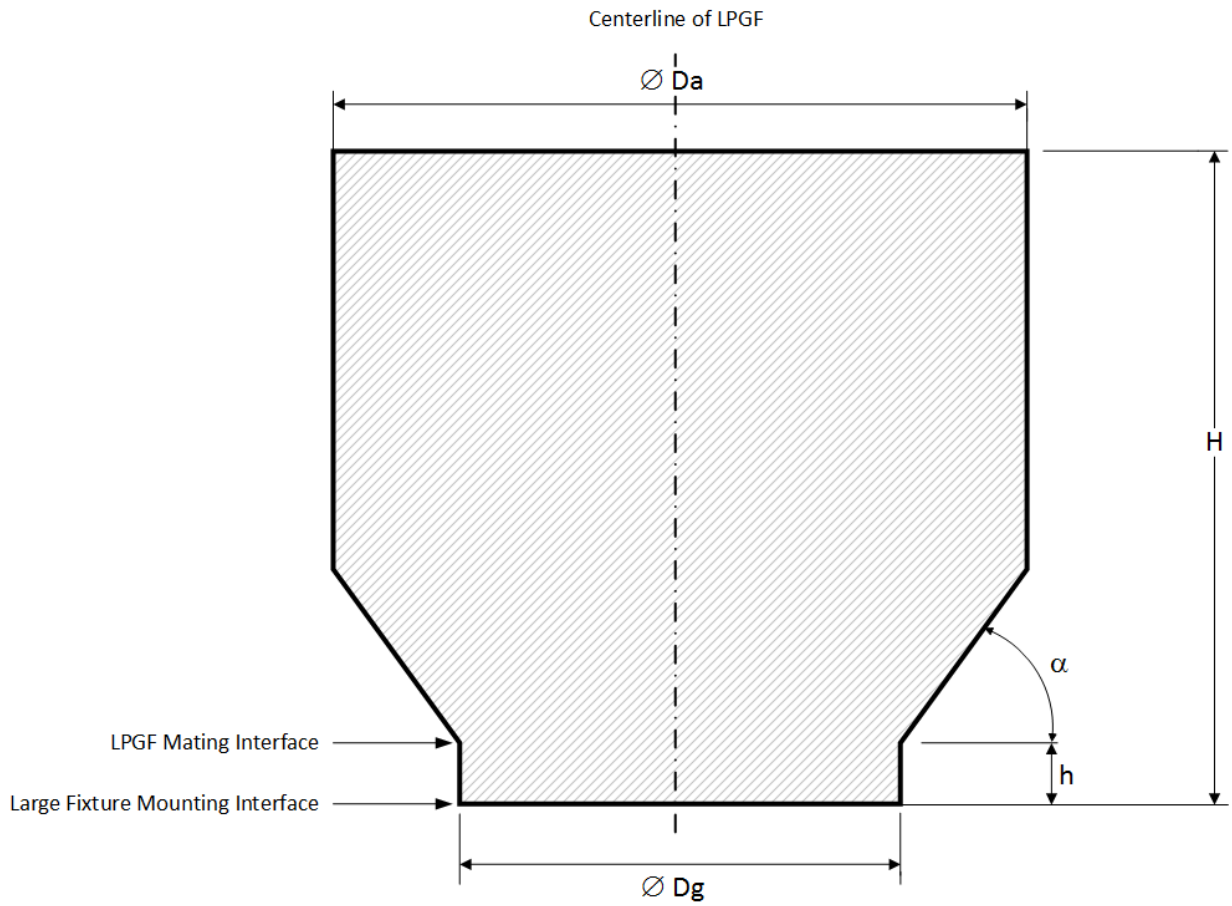

Envelope	Ø Da	Ø Dg	H	h	α
	Mm	mm	mm	mm	deg
Approach to Static or station-attached Payload	1428	912	1350	128	54

Notes:
1. User Stay-out Zone (a.k.a. Clearance Volume) is centered on the centerline of the LPGF.
2. Envelopes are based on LGPF, EE, and wrist cluster volumes only. No consideration has been made for attached payloads, which need to be evaluated separately for clearance
3. Encroachment into these envelopes is by waiver only.
4. Clearances required beyond dimension "**H**" from attachment plane will be dependent on the User and the required manipulator configuration.
5. The approach envelopes do not account for manipulator runaway.
6. Hardware Clearance Envelope is a function of the EE.

FIGURE 15 LPGF CLEARANCE APPROACH ENVELOPE

4.4.1.2.2 MECHANICAL INTERFACE

The LPGF mechanical interface shall conform to the common mechanical interface specified in section 4.2.3.

4.4.1.2.3 STRUCTURAL INTERFACE

The LPGF structural interface shall conform to the common structural interface specified in section 4.2.4.

4.4.1.2.3.1 MASS

The mass of the LPGF shall not exceed 11.3 kg **<TBR 4-8>**).

Rationale: Based on preliminary estimates for LPGF

4.4.1.2.4 ELECTRICAL INTERFACE

4.4.1.2.4.1 ELECTRICAL CONNECTORS

The proposed electrical interface functions available to a generic external User is illustrated in Figure 16 with characteristics summarized in Table 4-4.

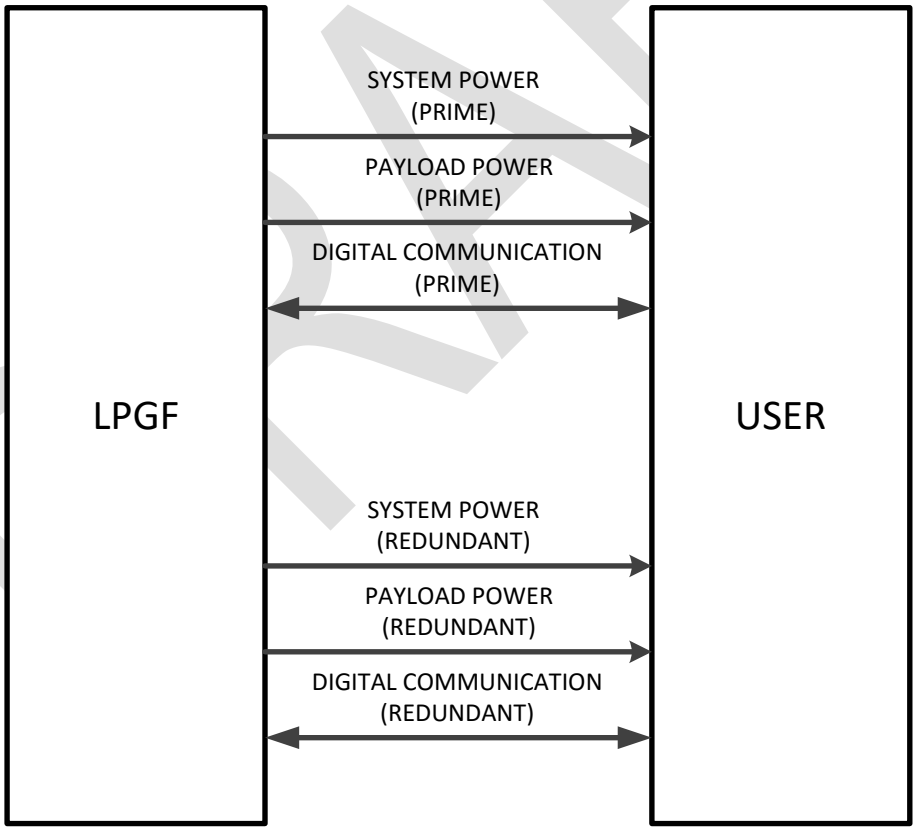

FIGURE 16 LPGF TO USER ELECTRICAL INTERFACES <TBR 4-5>

TABLE 4-4 LPGF ELECTRICAL INTERFACE PARAMETERS <TBR 4-6>

Function[1]	Operating Current (Amps)	Interface Voltage (volts)	Wire Type	# of Wires
System Power[2]	0 to 20.4 (TBR)	98 to 136 (TBR) (current dependent)	12 AWG Wires (TBR)	2 (TBR)
System Power Return	0 to 20.4 (TBR)	-	12 AWG Wires (TBR)	2 (TBR)
Payload Power[3]	0 to 20.4 (TBR)	98 to 136 (TBR) (current dependent)	12 AWG Wires (TBR)	2 (TBR)
Payload Power Return	0 to 20.4 (TBR)	-	12 AWG Wires (TBR)	2 (TBR)
External Digital Communication and Video (Manipulator <-> User)	N/A	LVDS (low power, high speeds) (TBR)	Gigabit Ethernet 100 Ohm Differential shielded (TBR)	4 Differential Pairs (TBR)

NOTES:

1. These functions are available on both prime and redundant channels/connectors
2. System Power is intended for use by the robotic element/manipulator itself with a maximum power demand of 2000 W (TBR)
3. Payload Power is intended for use by payloads onto which the LPGF is mounted with a maximum power demand of 2000 W (TBR).

4.4.1.2.4.2 POWER QUALITY

Electrical power supplied to the user will meet the power quality requirements in accordance with the International Space Power System Interoperability Standards (ISPSIS).

4.4.1.3 VERIFICATION

TBD

4.4.2 FREE FLYER GRAPPLE FIXTURE INTERFACE

4.4.2.1 GENERAL

The Capture and Berthing of the free-flying vehicles using a robot arm requires flight support equipment (FSE) to enable the robot arm to interface with the vehicle. These FSE include the Free Flyer Grapple Fixture (FFGF) which is mounted on a visiting vehicle to allow their capture and handling by a manipulator.

4.4.2.1.1 FFGF DESCRIPTION

The FFGF provides the User payload with on-orbit mechanical and structural interfaces to the tip of a manipulator, as well as thermal isolation and electrical bonding. Contingency release capability should not rely on EVA due to the time criticality of free flyer capture and should be provided by the active end-effector to reduce mass and complexity of each individual FFGF (Appendix F: Contingency release trade). The general configuration and interfacing provisions of the FFGF are shown in Figure 17.

The FFGF is based on the ISS-heritage Flight Releasable Grapple Fixture (FRGF), and is updated for use with DSG (e.g. reduced mass).

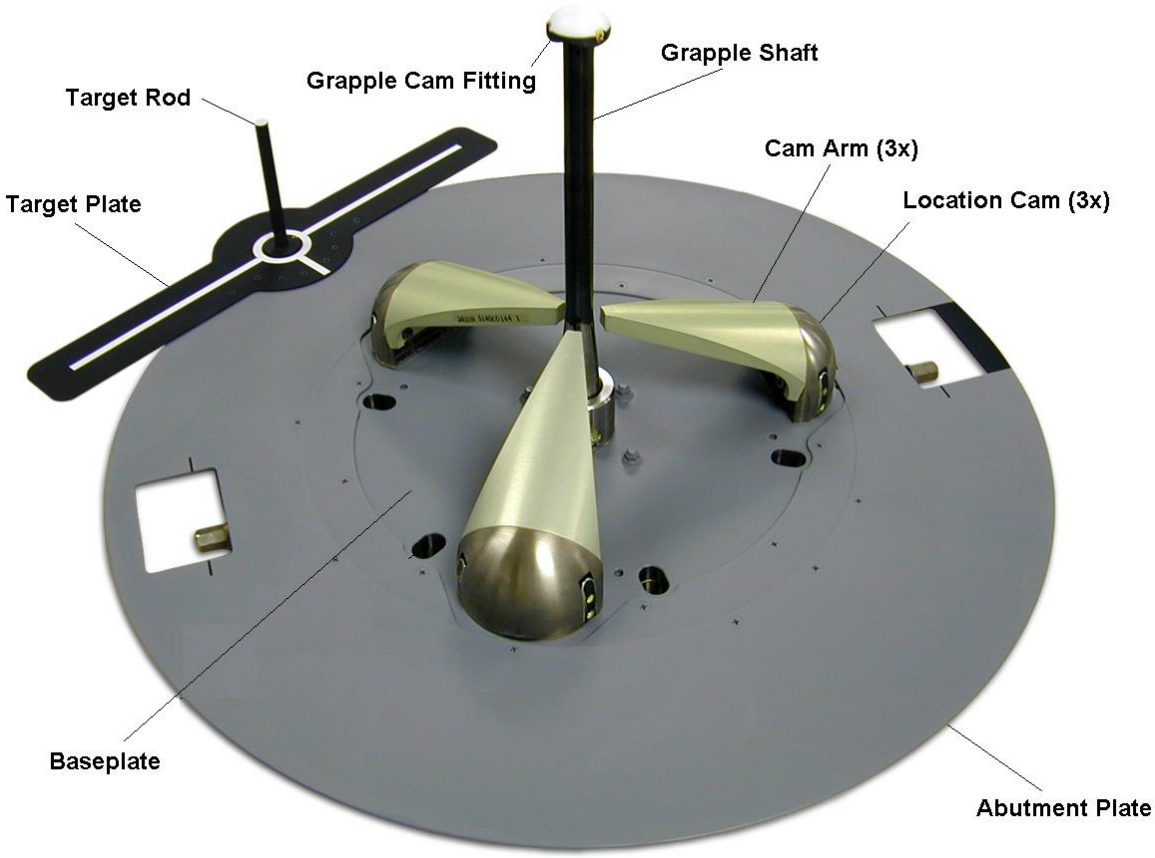

FIGURE 17 FFGF (INTERFACE TO ROBOT END EFFECTOR)

4.4.2.1.2 COORDINATE SYSTEMS

The FFGF Coordinate System is defined in Figure 18.

Rationale: For consistency, the FFGF coordinate system is nominally aligned with the standard operations coordinate system (3.1.3) and the common LFM coordinate system (4.2.1) when mated.

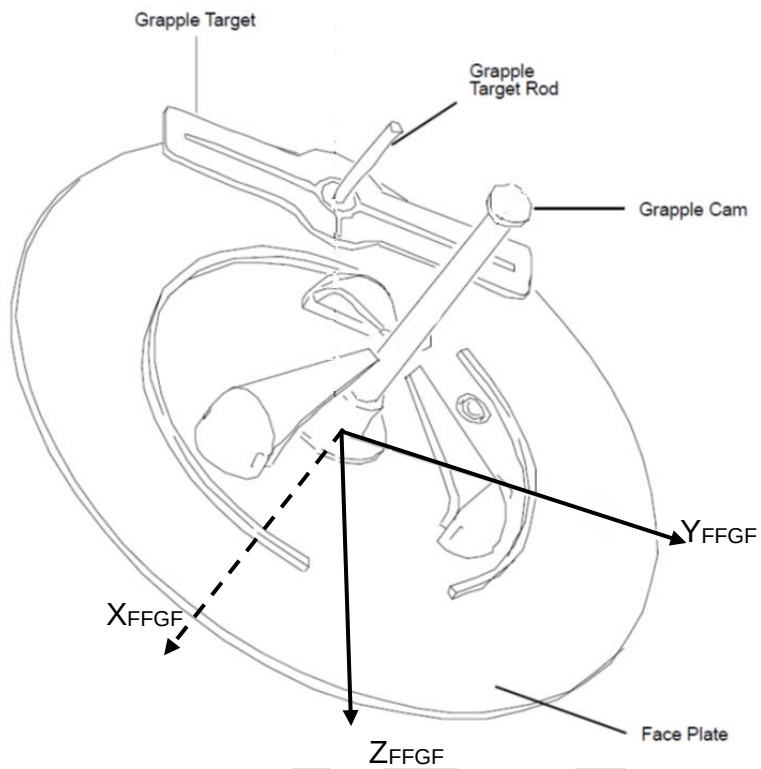

FIGURE 18 FFGF COORDINATE SYSTEM

TABLE 4-5 FFGF COORDINATE SYSTEM DESCRIPTION

Name	Symbol	Position	Orientation	Purpose
Free Flyer Grapple Fixture Coordinate System	X_{FFGF}, Y_{FFGF}, Z_{FFGF}	Center of Grapple Shaft on the EE/GF interface plane	$+X_{FFGF}$: Normal to Face Plate along the centerline of Grapple Shaft, and directed from Origin away from Grapple Cam $+Y_{FFGF}$: Completes the right-handed coordinate system $+Z_{FFGF}$: Perpendicular to X_{FFGF} and directed from Origin away from the grapple target centerline. When installed on its mounting interface, Z_{FFGF} is parallel with Z_{LFM} as defined in section 4.2.1.	Description of the FFGF interface to manipulator end-effector.

4.4.2.1.3 FFGF FUNCTIONS

The FFGF shall:

1. Support mechanical/structural attachment to the User
2. Provide capability for electrostatic discharge bleed-off to the User

4.4.2.2 REQUIREMENTS

4.4.2.2.1 ENVELOPES

4.4.2.2.1.1 CLEARANCE APPROACH ENVELOPE

The FFGF clearance approach envelope is defined in Figure 19 and Table 4-6. The approach envelope shall be kept clear of intrusions. Intrusions into the approach envelope's keep out zone may result in impact and contact loads with the manipulator during operations.

Rationale: The FFGF approach envelope dimensions are based on SRMS heritage from the Shuttle program.

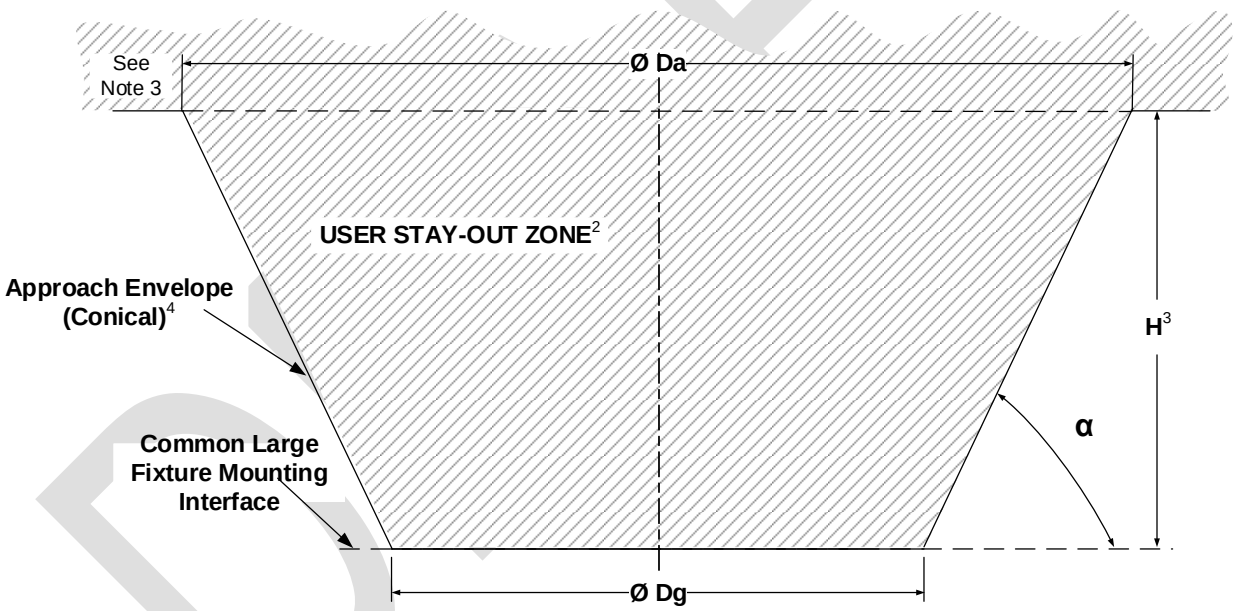

FIGURE 19 FFGF CLEARANCE APPROACH ENVELOPE

TABLE 4-6 FFGF APPROACH ENVELOPE

Envelope	Ø Da (ref.)	Øe Dg	H	α
	mm	mm	mm	deg.
EE Approach to Dynamic or FF Payload	1527	674	508	50

Notes: See Figure 19 for reference

1. User Stay-out Zone (a.k.a. Clearance Volume) is centered on the centerline of the FFGF.
2. Encroachment into these envelopes is by waiver only.
3. Clearances required beyond dimension "**H**" from attachment plane will be dependent on the User and the required manipulator configuration.
4. The approach envelopes do not account for manipulator runaway.
5. Hardware Clearance Envelope is a function of the EE and not dependant on the FFGF

4.4.2.2.2 MECHANICAL INTERFACE

The FFGF mechanical interface shall conform to the common mechanical interface specified in section 4.2.3.

4.4.2.2.2.1 MOUNTING FASTENERS

The mounting joint configuration for the FFGF is shown in Figure 20.

Rationale: The mounting joint configuration illustrated is based on the mounting of heritage NSTS and ISS grapple fixtures.

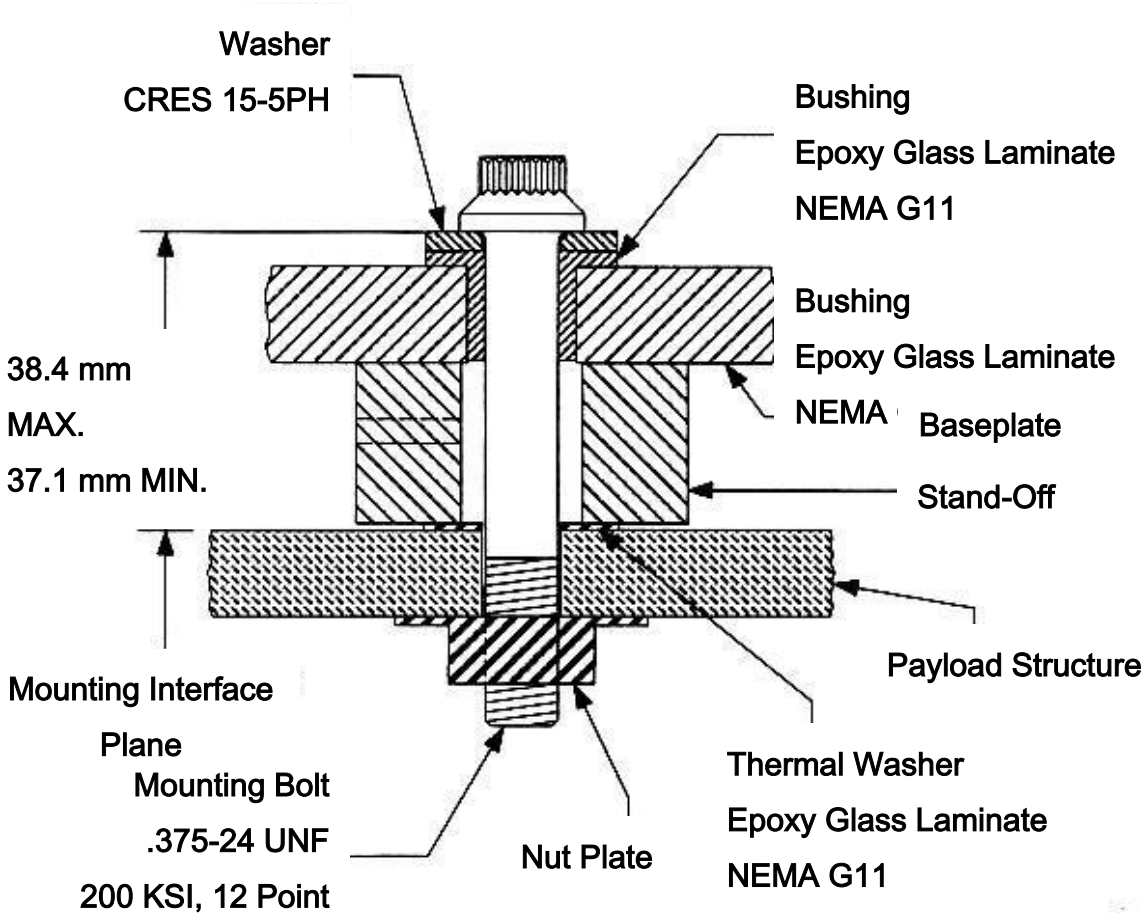

FIGURE 20 MOUNTING JOINT CONFIGURATION FOR FFGF

4.4.2.2.3 STRUCTURAL INTERFACE

4.4.2.2.3.1 OPERATING LOADS

The FFGF mounting interface shall be able to transmit the following forces and moments identified in Figure 21 and Figure 22, in combination with a shear force of 667N, between the manipulator's End Effector and the Mounting Interface.

Axial force is defined along X_{FFGF} of the FFGF while shear force is perpendicular to this axis.

Rationale: These loads represent the structural capacity of the heritage NSTS flight releasable grapple fixture (FRGF) used on the ISS program.

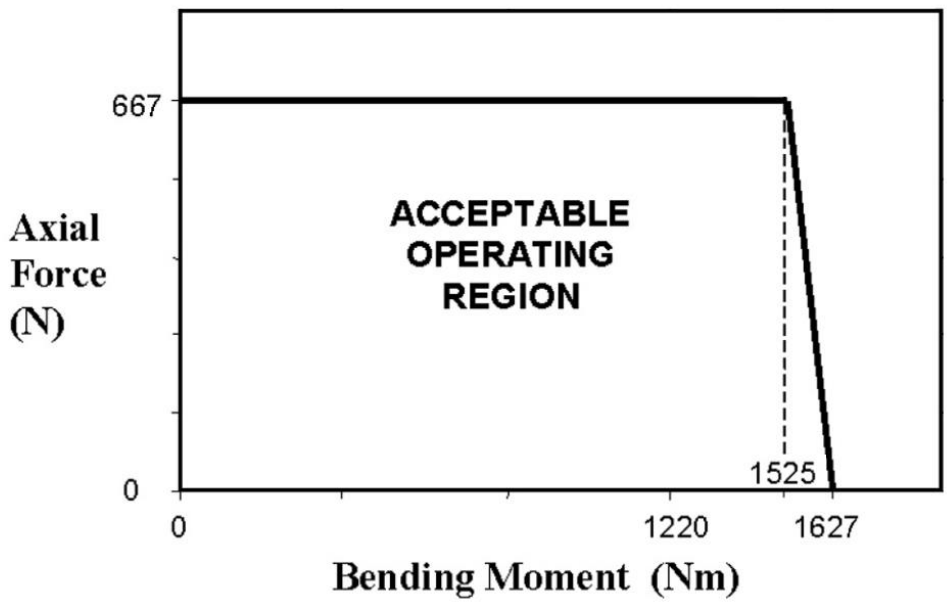

FIGURE 21 AXIAL FORCES VS. BENDING MOMENT

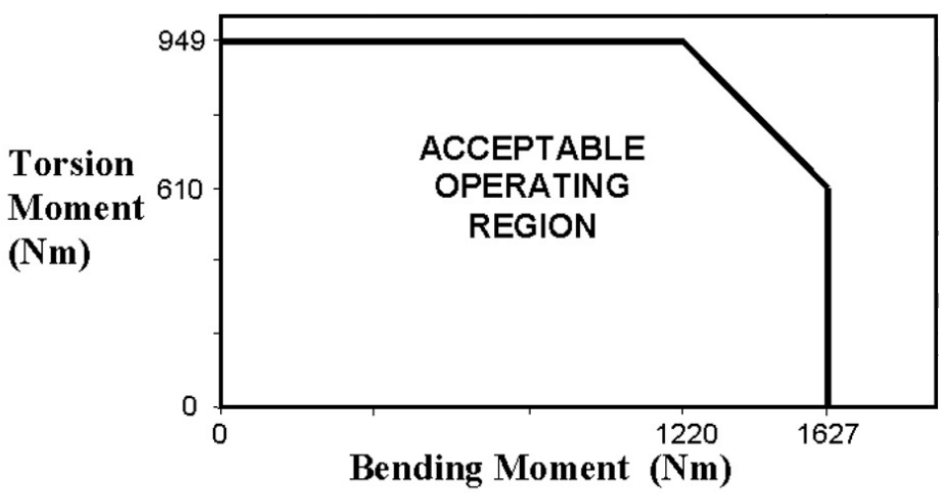

FIGURE 22 TORSION MOMENT VS. BENDING MOMENT

4.4.2.2.3.2 MASS

The mass of the FFGF shall not exceed 12.7kg.

Rationale: This mass is representative of a heritage flight releasable grapple fixture (FRGF) used on the ISS program. Note that the mass of a FRGF with the EVA release mechanism removed will be reduced (approximately 8 kg based on the heritage flight standard grapple fixture).

4.4.2.2.4 ELECTRICAL INTERFACE

No electrical services are provided for the FFGF.

4.4.2.2.5 TARGET

NOTE: FFGF target type is to be determined **<TBD 4-3>**. *FFGF may not use the heritage target that is designed for human-in-the loop operation. Targets are notional pending the selection of a standard machine vision compatible target definition.*

4.4.2.2.6 THERMAL INTERFACE

The thermal conductance between the User and the FFGF shall not exceed 0.9 W/°C.

Rationale: Allowable thermal conductance is per heritage FRGF design from the ISS program.

4.4.2.2.7 ELECTROMAGNETIC ENVIRONMENTS

4.4.2.2.7.1 BONDING

The FFGF User structure shall be electrically isolated from FFGF, except for the electrostatic discharge bleed-off assembly, referred to as the ground strap and provided with the FFGF. The ground strap serves as a means of bleeding static charges between the two structures, as illustrated in Figure 23.

The ground strap provides a nominal resistance of 5.0 KΩ to limit the magnitude of electrical currents flowing between the FFGF and User structures.

The User is responsible for termination of the ground strap to the User structure per [AD-06]

The FFGF has three possible ground strap locations as defined in Figure 24.

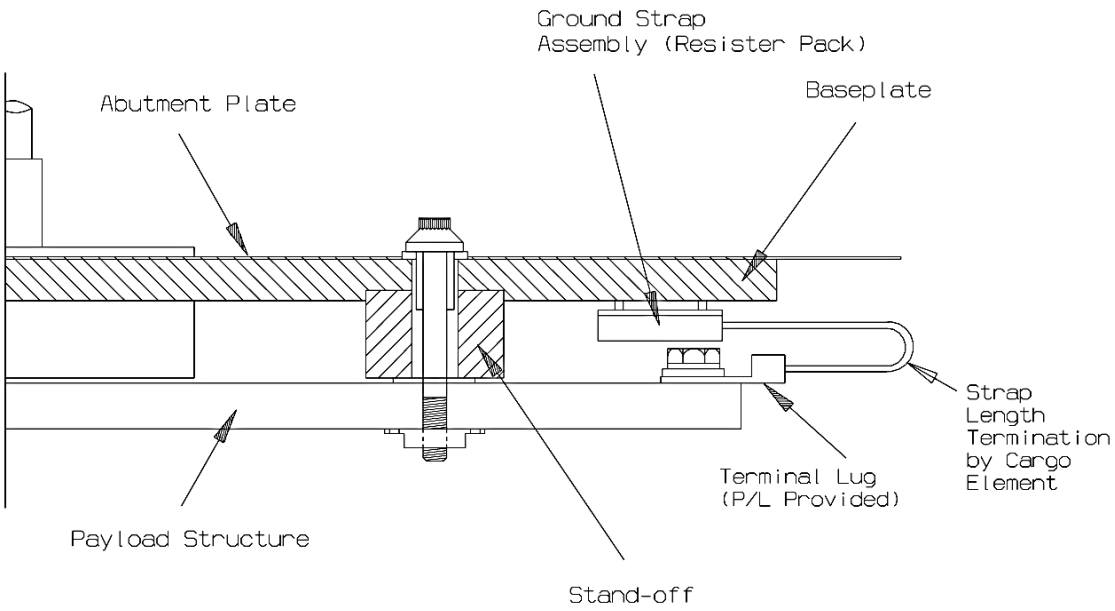

FIGURE 23 GROUND STRAP CONFIGURATION

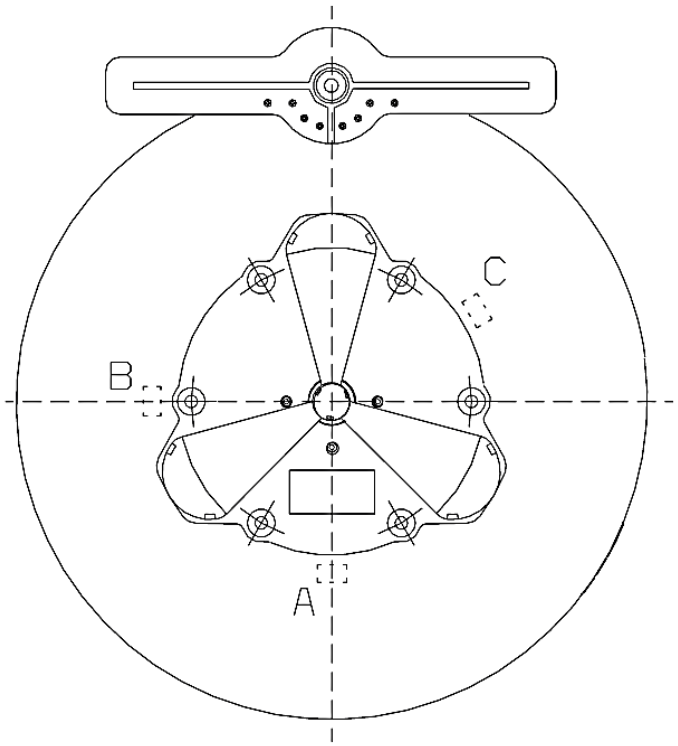

FIGURE 24 GROUND STRAP LOCATIONS

4.4.2.3 VERIFICATION

TBD

5.0 SMALL ORU PLATFORM INTERFACE

5.1 GENERAL

The small ORU platform provides the interface between various ORU families and vehicles or modules. This interface allows ORUs or payloads to be reliably berthed to a worksite or transfer-site via the manipulator, EVA, or IVA (for transfer through an airlock). The small platform can also be utilized for surface mobility applications such as sample canister return from the lunar surface.

The small ORU platforms have two common mounting interface planes (Figure 2): the common small platform mounting interface between the platform and the host vehicle/module/carrier to which it attaches, and the common small receptacle mounting interface between the platform and the ORU.

Details and requirements pertaining to specific small platform interface implementations are detailed in Section 5.6.

Common and specific interface requirements are based on ISS heritage and represent best available information at the time of document release. Requirements are expected to evolve as the DSG design matures.

5.1.1 COMMON INTERFACE DESCRIPTION

The common small ORU platform interface establishes a generic mounting interface standard for small payloads. The goal is to furnish payload designers with generic interface hardware that isolates the payload from the mate/demate operation thus facilitating simple and repeatable robotic handling while supporting standard electrical services.

5.1.2 COMMON INTERFACE FUNCTIONS

The Small Platform interface shall

a) Support mechanical and structural attachment to the user.

b) Provide EVA/EVR access to interface attachments and connections

c) Provide an electrical bonding capability to the user

d) Provide power and data utility distribution to the user via a harness.

5.2 COMMON REQUIREMENTS, ORU TO SMALL PLATFORM INTERFACE

5.2.1 COORDINATE SYSTEMS

The common Small Platform Mounting (SPM) coordinate system is defined in Figure 25. An overview and description of the coordinate system is provided in Table 5-1.

Rationale: For consistency, the SPM coordinate system is aligned with Small Platform standard operations coordinate system (3.1.3) and the Small Receptacle Mounting (SRM) coordinate system 5.4) when mated.

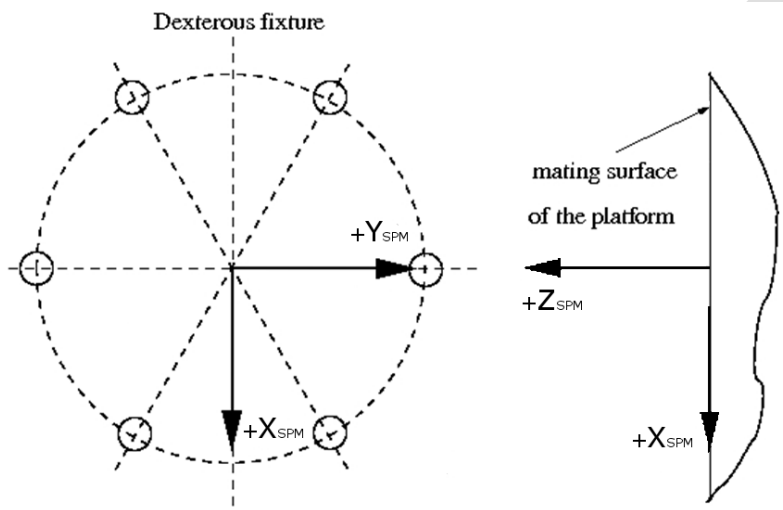

FIGURE 25 SMALL PLATFORM ORU MOUNTING (SPM) COORDINATE SYSTEM

TABLE 5-1 COMMON SMALL PLATFORM ORU MOUNTING COORDINATE SYSTEM DESCRIPTION

Name	Symbol	Position	Orientation	Purpose
Common small platform mounting interface coordinate system	X_{SPM} Y_{SPM} Z_{SPM}	Geometric center of bolt pattern	$+X_{SPM}$: Parallel to the mating surface and pointing away from the dexterous fixture $+Y_{SPM}$: Completes the right-handed coordinate system $+Z_{SPM}$: Normal to the mounting plane away from the ORU platform	Description of the small platform mounting coordinate system

5.2.2 ENVELOPES

5.2.2.1 LOCATING

5.2.3 MECHANICAL INTERFACE

5.2.3.1 ORU MOUNTING BOLT HOLE PATTERNS

The mounting bolt hole pattern and details of the mechanical interface for the Small Platform Interface are defined in Figure 26.

Rationale: The bolt pattern presented is derived from a heritage mounting interface that has been used on the ISS program.

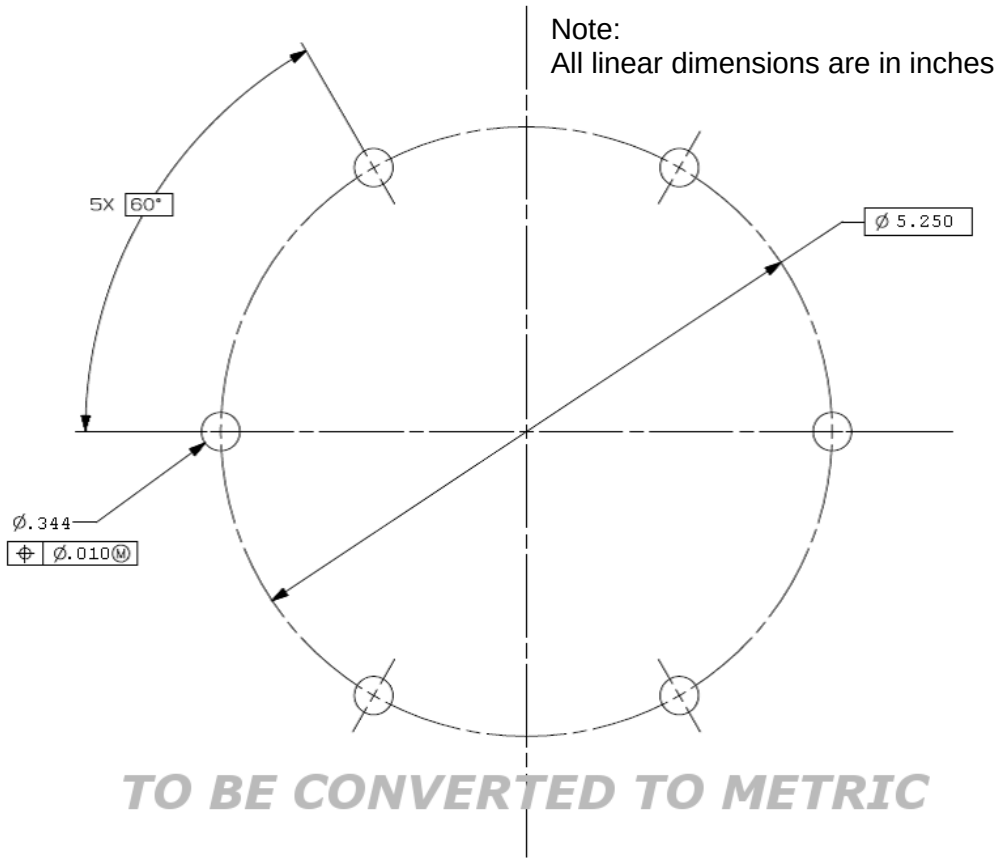

FIGURE 26 PLATFORM ORU MOUNTING BOLT HOLE PATTERN

5.2.4 STRUCTURAL INTERFACE

5.2.4.1 PAYLOAD MASS CAPACITIES

The payload mass capacity of the small platform interfaces as a function of operational environment are defined in the specific subsections of IERIS (e.g. 5.6.1.2.4.1, 5.6.2.2.4.1, etc.)

Rationale: Payload capacities are derived from the maximum loads that the interface can experience. Payloads that are launched while mounted to the small platform will experience significantly higher acceleration and vibration environments than interfaces that are installed and handled on-orbit.

5.2.5 ELECTRICAL INTERFACE

The Small ORU platform should have two electrical interfaces: 1) a worksite electrical interface to support power/video/data to the payload when mated to the Small ORU Receptacle at the worksite, and 2) an umbilical electrical interface to support power/video/data to the payload when grasped/operated by EVR.

5.2.5.1 ELECTRICAL CONNECTOR

The worksite electrical interface consists of two connectors: a female connector on the Small ORU Receptacle and a complimentary male connector on the Small ORU Platform to interface with it (only the male connector of the worksite electrical interface is to be wired to the ORU payload).

The umbilical electrical interface consists of one connector: a male connector positioned relative to the dexterous fixture such that it interfaces with the manipulator EE. For both the worksite and umbilical electrical interfaces, the Small ORU Platform will be designed with the connectors physically located appropriately for EVR and mate/demate operation with platform cable harnesses leading to the payload in the form of a pigtail. These pigtails will provide the payload with a means to receive electrical services where:

a) The User may integrate the pigtail wire end of the platform cable harnesses with a connector of their choice.

b) The User shall be responsible for routing and securing the platform cable harnesses to ensure they remain outside of the EVR/EVA clearance envelopes for the platform.

5.2.6 POWER INTERFACE

5.2.7 DATA INTERFACE

5.2.8 VIDEO INTERFACE

5.2.9 ELECTOMAGNETIC ENVIRONMENTS

5.2.9.1 ELECTROMAGNETIC COMPATIBILITY

The User shall meet the requirements of [AD-06] , International Electromagnetic, Electrostatic and Bonding Requirements.

5.2.9.2 BONDING AND GROUNDING

When interfacing with the Small ORU Platform the User shall meet the bonding and grounding requirements specified in [AD-06], International Electromagnetic, Electrostatic and Bonding Requirements

5.3 VERIFICATION, ORU TO SMALL PLATFORM INTERFACE

TBD

5.4 COMMON REQUIREMENTS, VEHICLE/MODULE TO SMALL RECEPTACLE INTERFACE

5.4.1 COORDINATE SYSTEMS

The common Small Receptacle Mounting (SRM) coordinate system is defined in Figure 27. An overview and description of the coordinate system is provided in Table 5-2.

Rationale: For consistency, the SRM coordinate system is aligned with Small Platform standard operations coordinate system (3.1.3) and the SPM coordinate system (5.2.1) when mated.

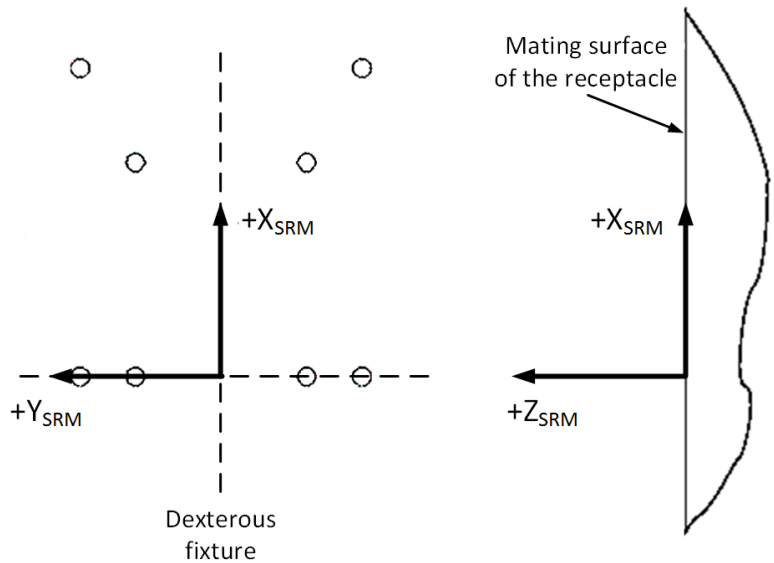

FIGURE 27 SMALL RECEPTACLE MOUNTING (SRM) COORDINATE SYSTEM

TABLE 5-2 COMMON SMALL RECEPTACLE MOUNTING COORDINATE SYSTEM DESCRIPTION

Name	Symbol	Position	Orientation	Purpose
Common small receptacle mounting coordinate system	X_{SRM} Y_{SRM} Z_{SRM}	Geometric center of the bolt patterns, centered on bolt holes closest to the dexterous fixture	$+X_{SRM}$: Parallel to the mating surface and pointing away from the dexterous fixture $+Y_{SRM}$: Completes the right-handed coordinate system $+Z_{SRM}$: Normal to the mounting plane into the receptacle	Description of the small receptacle mounting frame

5.4.2 ENVELOPES

5.4.2.1 LOCATING REQUIREMENT

5.4.3 MECHANICAL INTERFACE

5.4.3.1 MOUNTING BOLT HOLE PATTERNS

The mounting bolt pattern and details of the mechanical interface for the small ORU platform receptacle are defined in Figure 28.

The standard bolt hole pattern for the small ORU platform is comprised of four bolt holes arranged in a rectangular pattern. The common bolt hole pattern supports provisions for full and reduced size platform variants. Inner bolt hole mounting pattern dimensions are **<TBR 5-5>**. For additional details regarding the full and reduced small ORU platforms refer to the specific implementations section.

Rationale: Large outer bolt hole pattern is based on existing Wedge Mating Interface receptacle design from ISS. The inner bolt hole pattern supports a reduced size small ORU platform design optimized for payloads with smaller mass and/or load requirements. Both interfaces are aligned along the bottom so that both versions can present a common edge for installation. Supporting both designs in the common bolt pattern allows module providers to have maximum flexibility to respond to changes in the external payload accommodation plan, and presents opportunities for mass optimization.

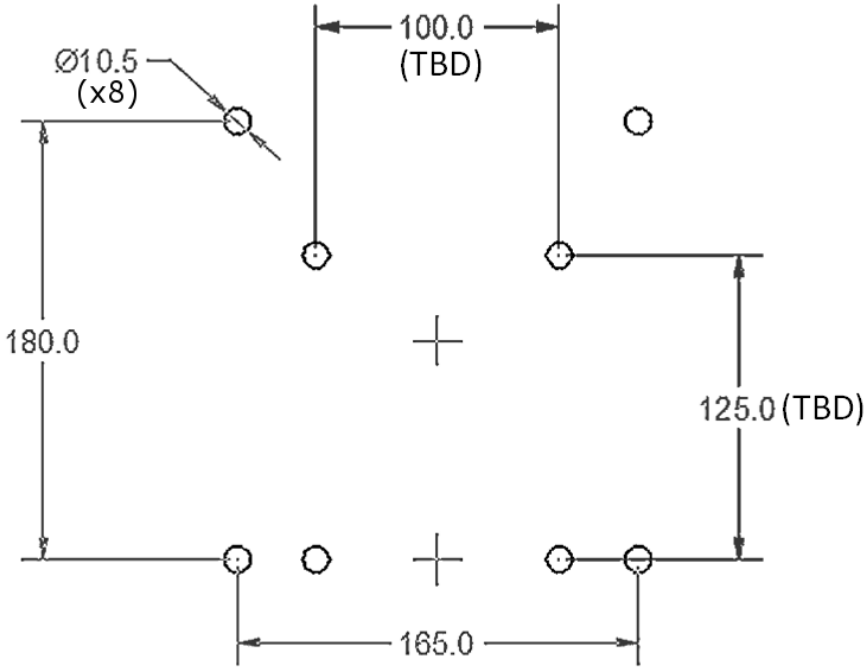

Note:
All linear dimensions are in millimeters

FIGURE 28 RECEPTACLE MOUNTING BOLT HOLE PATTERN

5.4.4 STRUCTURAL INTERFACE

5.4.4.1 BENDING LOADS

5.4.4.2 IMPACT LOADS

5.4.5 ELECTRICAL INTERFACE

5.4.6 POWER INTERFACE

5.4.6.1 POWER QUALITY

Electrical power supplied to the user will meet the power quality requirements in accordance with ISPSIS Power Standards.

5.4.7 DATA INTERFACE

All data interface connections at the small platform receptacle interface are pass through wiring.

5.4.8 VIDEO INTERFACE

All video interface connections at the small platform receptacle interface are pass through wiring.

5.4.9 ELECTROMAGNETIC ENVIRONMENTS

5.4.9.1 ELECTROMAGNETIC COMPATIBILITY

The User shall meet the requirements of [AD-06], International Electromagnetic, Electrostatic and Bonding Requirements.

5.4.9.2 BONDING AND GROUNDING

When interfacing with the Small ORU Receptacle, the User shall meet the bonding and grounding requirements specified in [AD-06], International Electromagnetic, Electrostatic and Bonding Requirements

5.4.9.3 ELECTROSTATIC DISCHARGE

When interfacing to the Small ORU Receptacle, the User shall meet the requirements of [AD-06], International Electromagnetic, Electrostatic and Bonding Requirements.

5.4.10 CONTAMINATION ENVIRONMENT

5.4.10.1 DUST

5.5 VERIFICATION, VEHICLE/MODULE TO SMALL RECEPTACLE INTERFACE

5.6 SPECIFIC SMALL ORU PLATFORM INTERFACES

5.6.1 ISS WEDGE MATING INTERFACE (ISS-WMI)

5.6.1.1 GENERAL

The ISS Wedge Mating Interface (ISS-WMI) is a robotics interface suitable for use as a platform for small ORUs. The ISS-WMI allows for removal and replacement of payloads on orbit and can be used to secure payloads for launch. The ISS-WMI is a mass optimized version of the same size and load capacity as the WMIs that are currently deployed on the ISS and used for ORUs such as the MSS Camera Light Pan-Tilt Assemblies (CLPAs). The mating surface geometry is backwards compatible with those on ISS and the electrical interface is based on the planned IDA3 tech demo WMIs that can facilitate redeployment of tech demo ORUs or payloads from the ISS to the DSG.

If the mass of the ISS-WMI assembly is large w.r.t. the planned ORU or payload to be installed the reader is referred to Section 5.6.2 for the family of smaller yet interoperable reduced load WMIs.

5.6.1.1.1 INTERFACE DESCRIPTION

The platform assembly (male wedge) is inserted fully into the platform receptacle (female bracket) via EVR or EVA. A tie-down bolt is actuated to secure the payload and connect the electrical worksite connector, if present. The wedge platform assembly is shown in Figure 29 below. The dexterous fixture and tie-down bolt arrangement concept shown on the platform assembly is shown for reference. Dexterous fixture is TBD and will be based on a dexterous fixture example from Section 7.0. The EE umbilical connector is not shown in the figure. Targets will be covered separately.

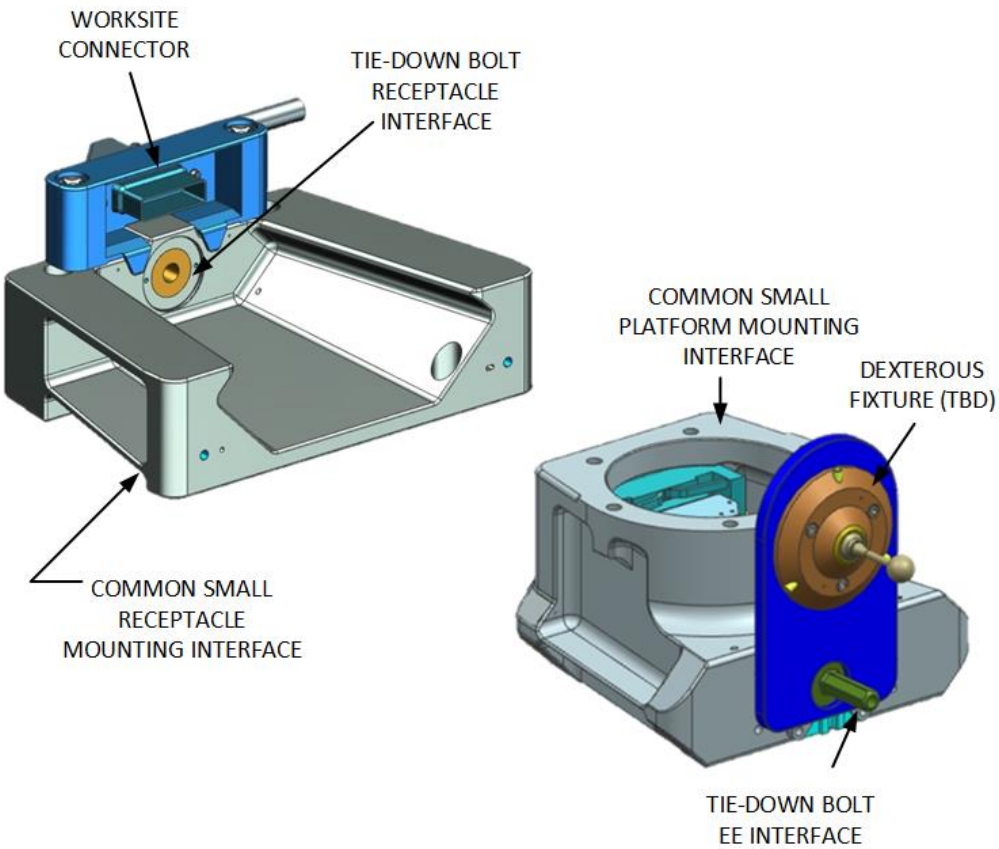

FIGURE 29 ISS WEDGE MATING INTERFACE (ISS-WMI)

5.6.1.1.2 INTERFACE FUNCTIONS

The ISS-WMI is a structural interface to support mating of an ORU to a vehicle/module. It features

1. Angled engagement surfaces which align the platform assembly (wedge) and platform receptacle features during mating
2. Optional blindmate connectors for providing access to electrical services (power, data, and video as desired) between a payload and the vehicle/module when mated.
3. Optional umbilical connectors for providing access to electrical services (power, data, video) from the manipulator when grasped.
4. Alignment targets to support situational awareness during mate/demate operations.
5. Optional magnetic soft dock capability for EVA operations.

5.6.1.2 REQUIREMENTS

5.6.1.2.1 COORDINATE SYSTEMS

The WMI Platform (WMIP) and WMI Receptacle (WMIR) Coordinate Systems are defined in Figure 30 and Figure 31. Dexterous fixture and tie-down bolt arrangement concept shown are for reference and are TBD.

Rationale: For consistency, the WMIP and WMIR coordinate systems are nominally aligned with the standard operations coordinate system (3.1.3). These frames are also aligned with the common SPM coordinate system (5.2.1) and the common SRM coordinate system (5.4.1) when mated.

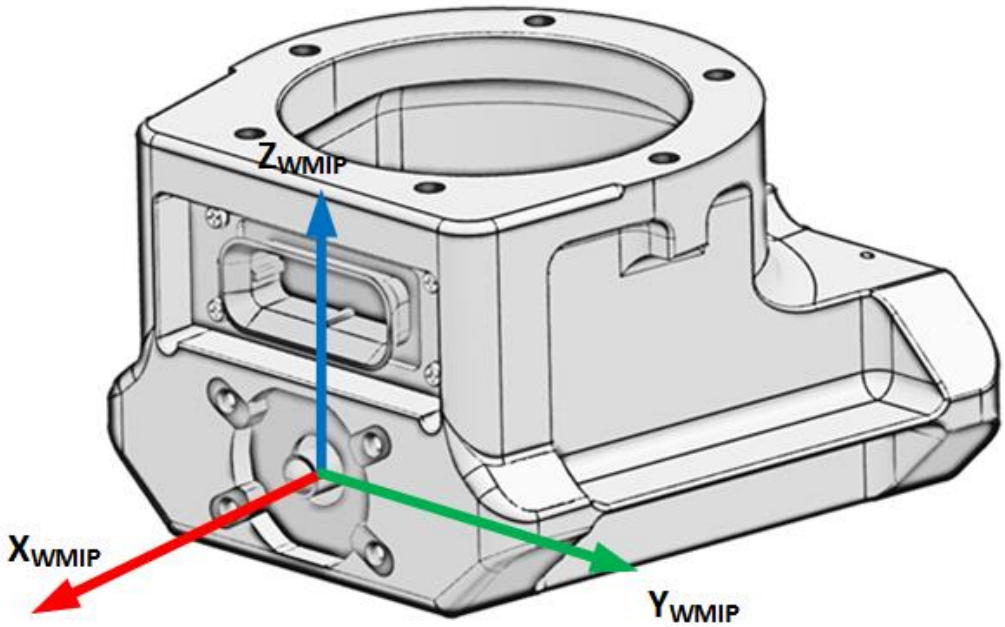

FIGURE 30 WMI PLATFORM COORDINATE SYSTEM

TABLE 5-3 WMI PLATFORM COORDINATE SYSTEM DESCRIPTION

Name	Symbol	Position	Orientation	Purpose
Wedge Mating Interface Platform Coordinate System	X_{WMIP}, Y_{WMIP}, Z_{WMIP}	Geometric center of tie-down bolt at the receptacle-platform interface plane	$+X_{WMIP}$: Aligned in the mate direction with the receptacle $+Y_{WMIP}$: Completes the right-handed coordinate system $+Z_{WMIP}$: Perpendicular to X_{WMIP} and directed from Origin into the payload. .	Description of ISS-WMI platform mate/demate interface.

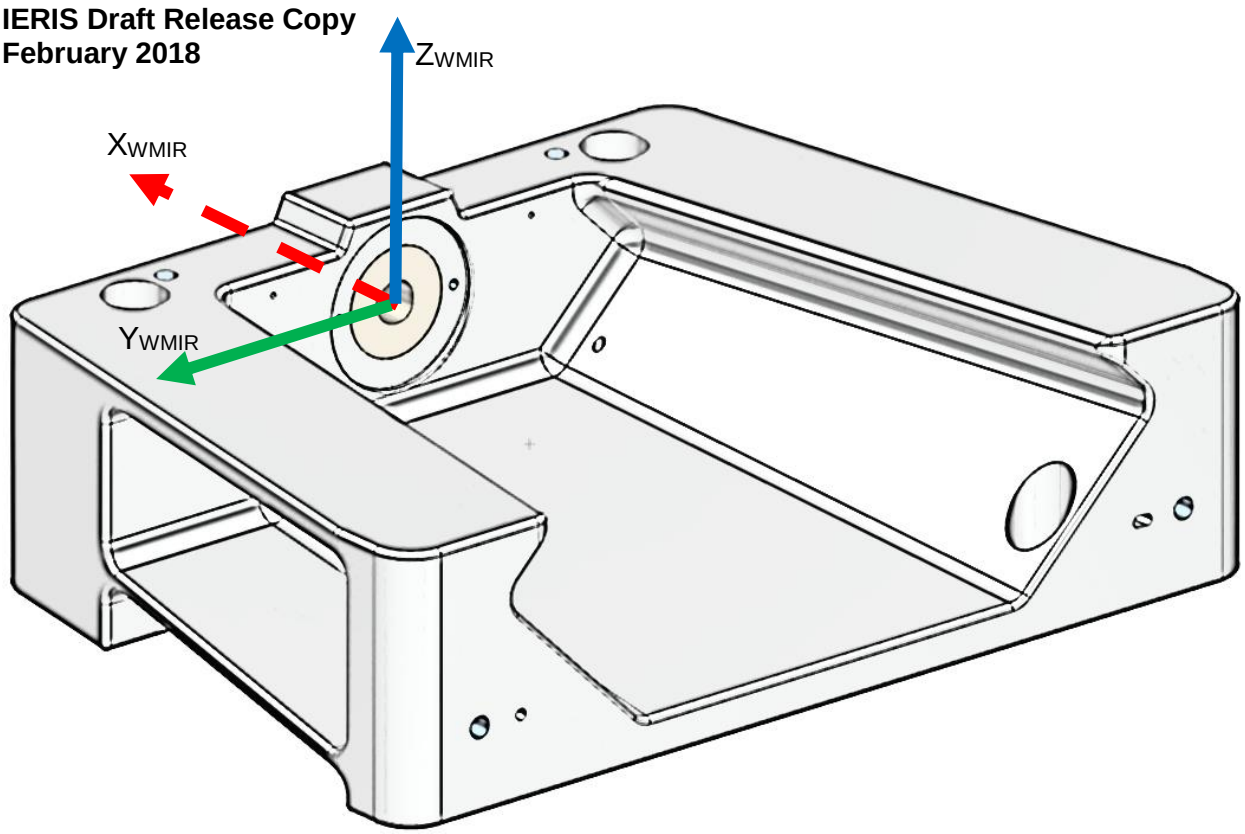

FIGURE 31 WMI RECEPTACLE COORDINATE SYSTEM

TABLE 5-4 WMI RECEPTACLE COORDINATE SYSTEM DESCRIPTION

Name	Symbol	Position	Orientation	Purpose
Wedge Mating Interface Receptacle Coordinate System	X_{WMIR}, Y_{WMIR}, Z_{WMIR}	Geometric center of Center of Tie-Down bolt interface at the receptacle-platform interface plane	$+X_{WMIR}$: Aligned in the mate direction with the receptacle $+Y_{WMIR}$: Completes the right-handed coordinate system $+Z_{WMIR}$: Perpendicular to X_{WMIP} and directed from Origin into the payload. .	Description of ISS-WMI receptacle mate/demate interface.

The relative alignment of ISS-WMI coordinate systems is shown in Figure 32. The following coordinate systems are aligned when the ISS-WMI nominally mated.

1. F_{WMIP}: WMI Platform (WMIP) coordinate system (Figure 30)
2. F_{WMIR}: WMI Receptacle (WMIR) coordinate system (Figure 31)
3. F_{SPM}: Small Platform Mounting (SPM) coordinate system (Figure 25)
4. F_{SRM}: Small Receptacle Mounting (SRM) coordinate system (Figure 27)

5. F_{DFM}: Dexterous Fixture (DFM) coordinate system (TBC)

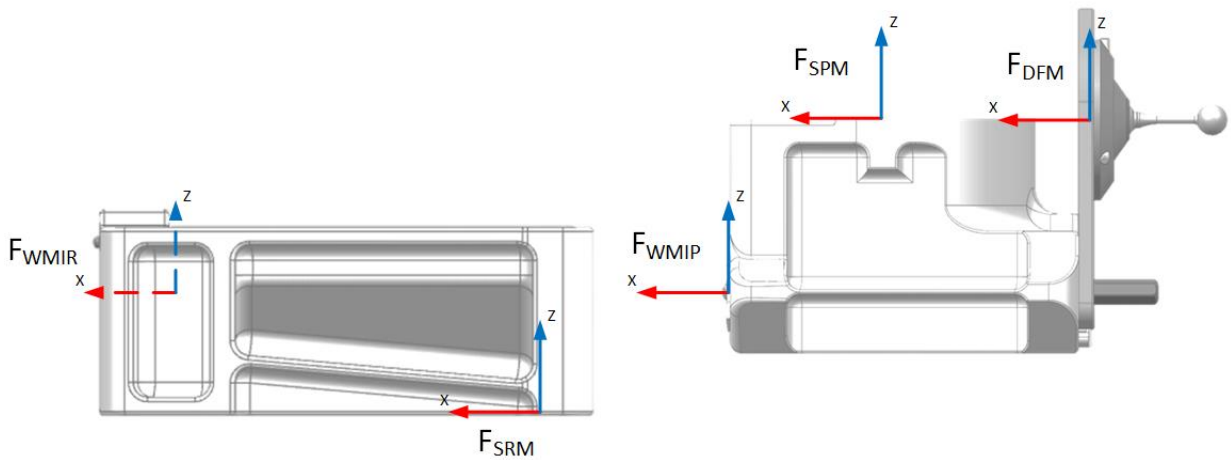

FIGURE 32: ISS-WMI COORDINATE SYSTEM SUMMARY

5.6.1.2.2 ENVELOPES

The generic manipulator approach envelope to the small platform is defined in Figure 33. Specific values for the small platform approach envelope are provided based on design estimates for the TBD dexterous end-effector. The approach envelope shall be kept clear of intrusions. Intrusions into the approach envelope's keep out zone may result in impact and contact loads with the manipulator during operations. The approach envelope is centered on the centerline of the dexterous grasp fixture mounted on the small platform as indicated in Figure 29..

Rationale: The current envelope is based on the conceptual design for the dexterous end-effector and makes assumptions regarding the dexterous fixture type. Dexterous fixture type selection trade is to be determined ***<TBD 5-2>****. Details are subject to change as design evolves.*

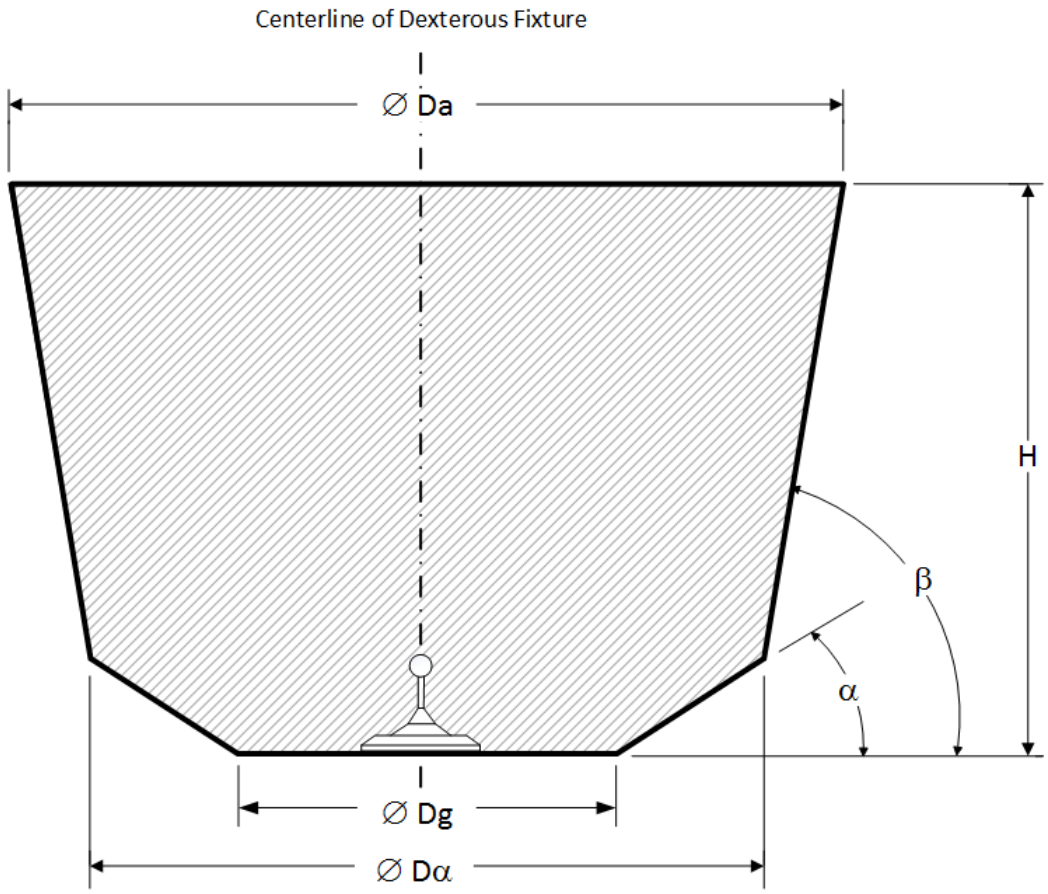

Envelope	Ø Da	Ø Dg	Ø Dα	H	α	β
	mm	mm	mm	mm	deg	deg
Approach to static dexterous grasp fixture	400	230	330	275	35	80

Notes:

1. Derived from conceptual designs for dexterous end-effector. Based on assumptions for selected type of dexterous fixture (TBD). Dexterous fixture concept shown in image for reference only. Dexterous fixture not to scale.
2. User Stay-out Zone (a.k.a. Clearance Volume) is centered on the centerline (X-axis) of the dexterous grapple fixture
3. Encroachment into these envelopes is by waiver only.
4. Clearances required beyond dimension “H” from attachment plane will be dependent on the User and the required manipulator configuration.
5. The approach envelopes are based off of nominal position tolerancing of the manipulator and do not account for manipulator runaway.
6. Hardware Clearance Envelope is a function of the EE and not dependant on the fixture

FIGURE 33 SMALL ORU PLATFORM APPROACH ENVELOPE

5.6.1.2.3 MECHANICAL INTERFACE

5.6.1.2.3.1 PLATFORM MOUNTING INTERFACE

The ORU mounting interface to the ISS-WMI platform is defined in Figure 34.

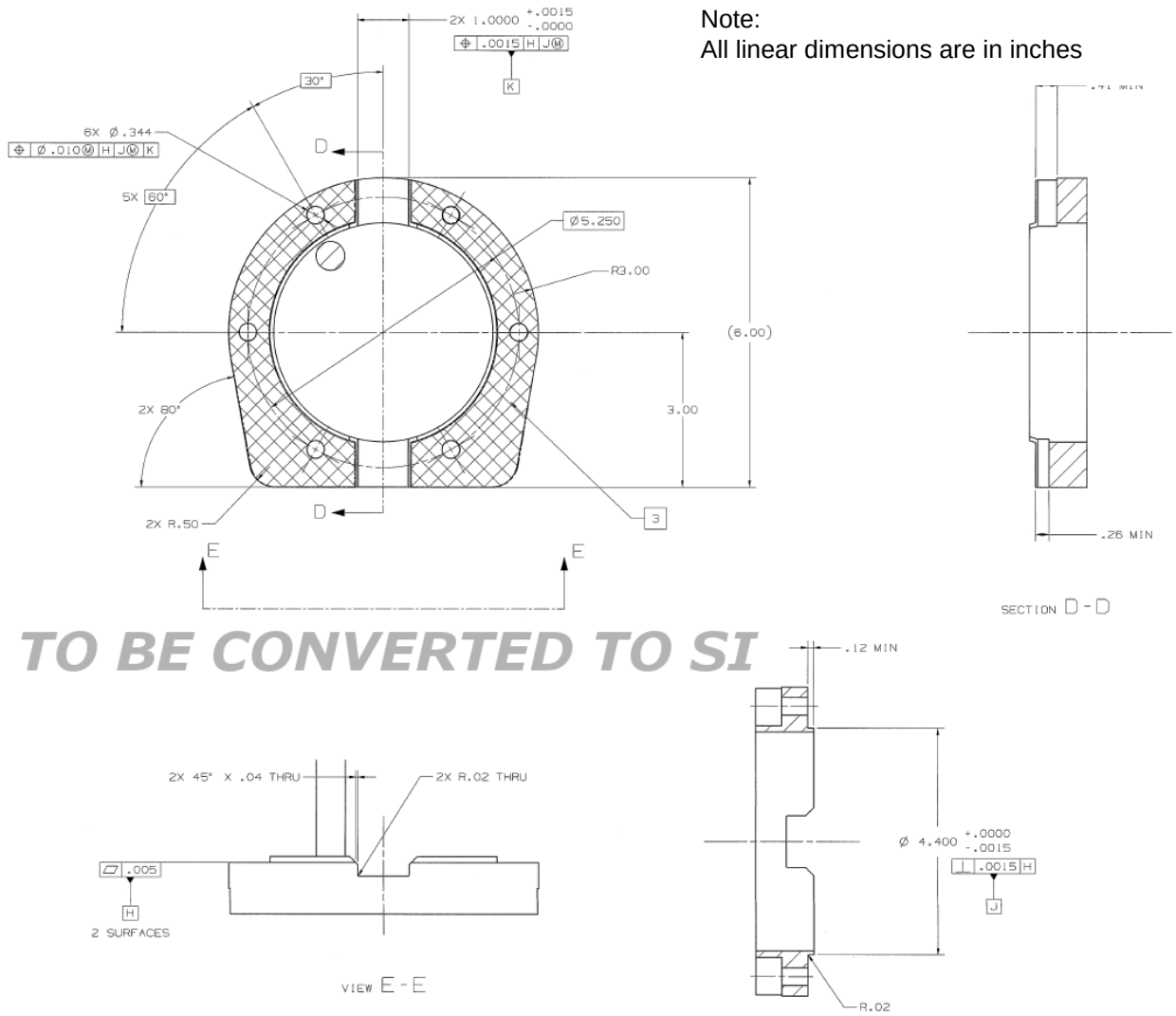

FIGURE 34 ORU MOUNTING INTERFACE TO ISS-WMI

5.6.1.2.3.2 PLATFORM MOUNTING FASTENERS

Bolt joint configuration for mounting a payload on the Small Platform is shown in Figure 35. Fasteners shall have a minimum ultimate tensile strength (UTS) of 180 KSI **<TBR 5-2>**.

Rationale: Based on existing Wedge Mating Interface receptacle design from ISS.

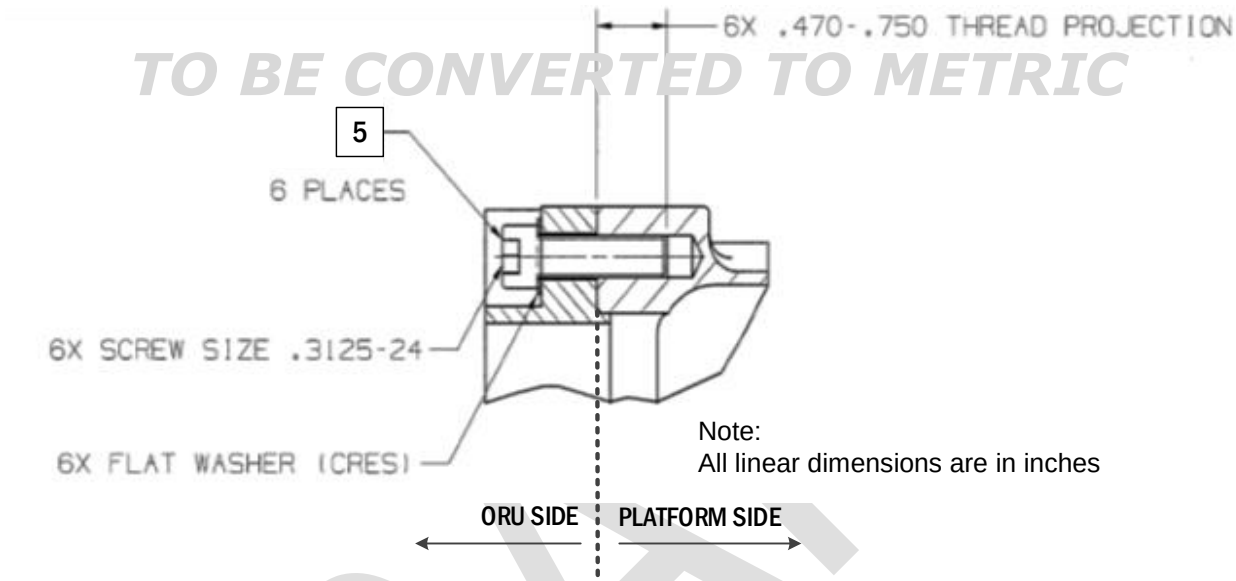

FIGURE 35 VIEW OF ASSEMBLED OF THE SMALL PLATFORM INTERFACE AND PAYLOAD

5.6.1.2.3.3 RECEPTACLE MOUNTING INTERFACE

The ISS-WMI receptacle mounting interface to the vehicle is defined in Figure 36.

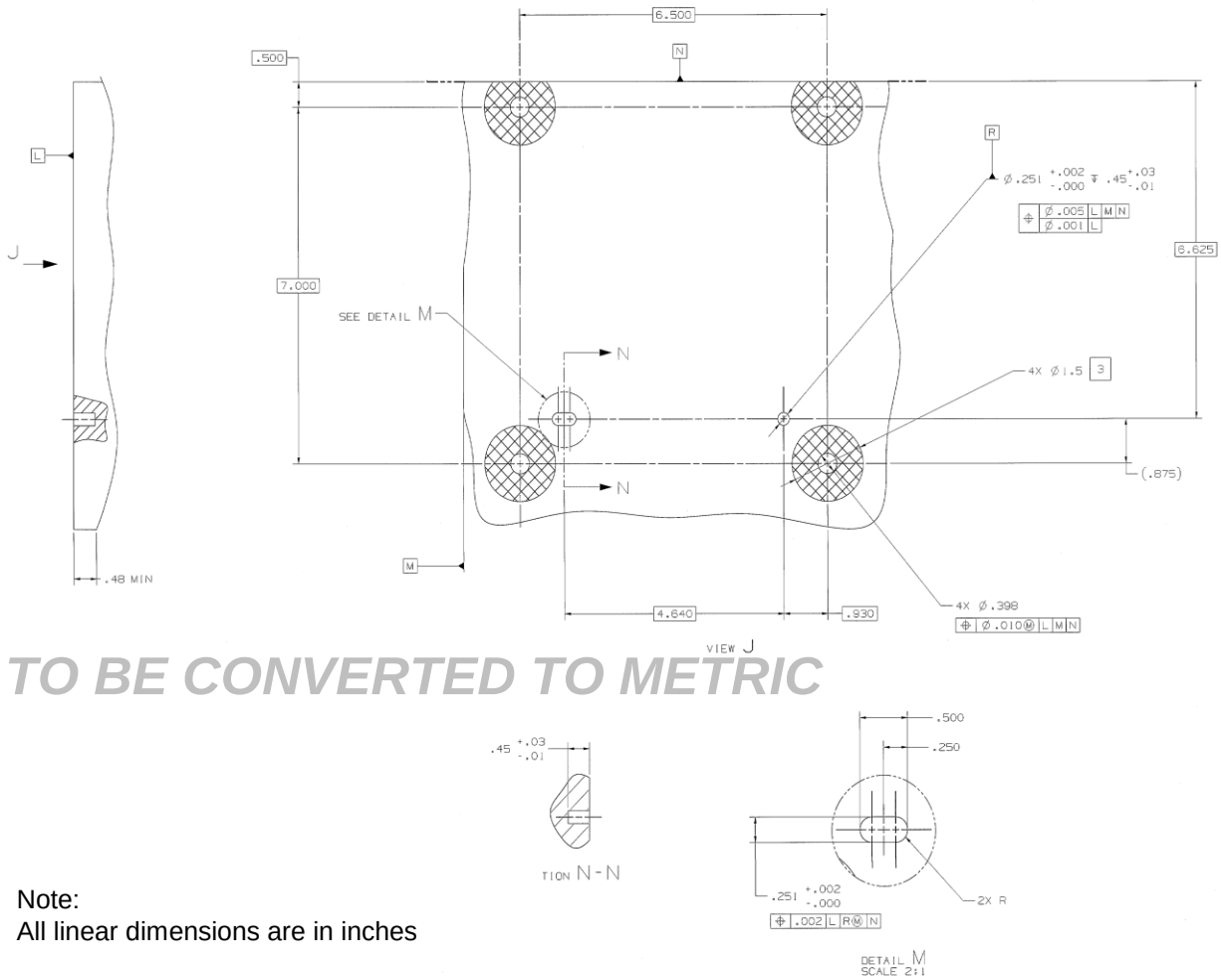

Note:
All linear dimensions are in inches

FIGURE 36 VEHICLE MOUNTING INTERFACE TO ISS-WMI

5.6.1.2.3.4 RECEPTACLE MOUNTING FASTENERS

Mounting interface joint configuration of the small receptacle is shown in Figure 37. Fasteners shall have a minimum UTS of 160 KSI **<TBR 5-3>**.

Rationale: Based on existing Wedge Mating Interface receptacle design from ISS.

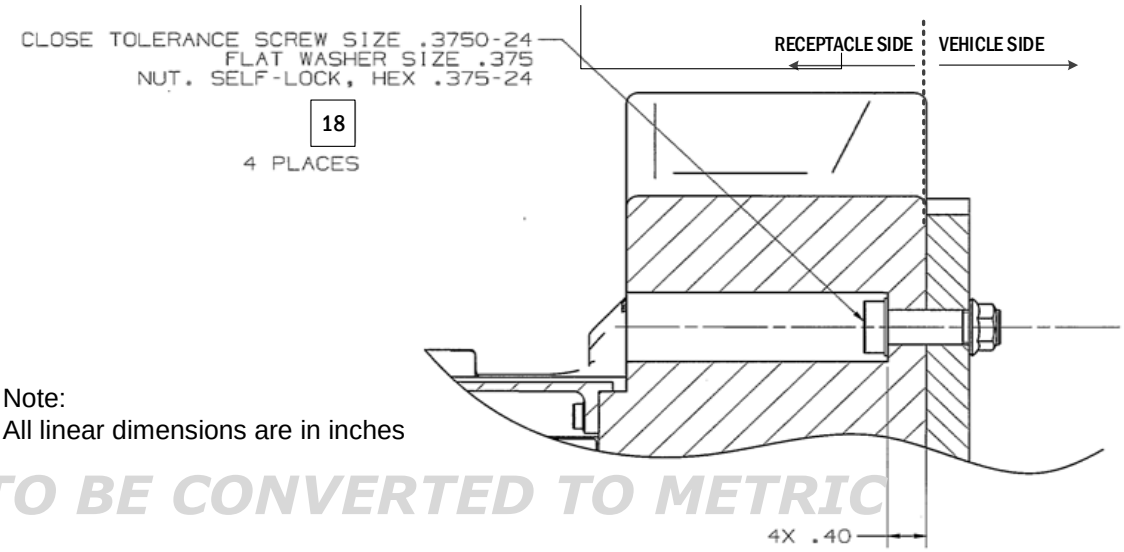

Note:
All linear dimensions are in inches

FIGURE 37 SMALL RECEPTACLE BOLTED ON A VEHICLE

5.6.1.2.4 STRUCTURAL INTERFACE

5.6.1.2.4.1 PAYLOAD MASS CAPACITIES

The payload mass capacities of the ISS-WMI as a function of the environment are specified in Table 5-5 **<TBR 5-6**>. Mass capacities listed are not to be exceeded.

Rationale: Payload capacities are derived from the maximum loads that the interface can experience. Payloads that are launched will experience significantly higher acceleration and vibration environments than interfaces that are installed and handled on-orbit. The Center of Gravity (CG) offset is measured relative to the ORU mounting interface of the WMI platform assembly.

TABLE 5-5 PAYLOAD MASS CAPACITIES OF THE ISS-WMI INTERFACE

Environment	ISS-WMI P/L Capacity
Launch	25 kg with 0.15 m CG (TBR)
On Station	288 kg with 1.0 m CG (TBR)

5.6.1.2.4.2 MOUNTING INTERFACE LOADS

When the platform assembly is secured in a mounting receptacle it can withstand a bending moment of up to 565 Nm and forces of up to 556 N in any axis.

Rationale: Based on ISS heritage.

5.6.1.2.4.3 IMPACT LOADS

The contact surfaces for the platform assembly and mounting receptacle are rated for 1 joule impact loads and 222 N contact loads.

Rationale: ISS-WMI ratings are based on heritage requirements from ISS program. The values describe expected contact loads with a dexterous manipulator.

5.6.1.2.4.4 STIFFNESS

The effective stiffness for both the platform assembly (between the 6-bolt payload interface and the dexterous fixture) as well as the mated platform assembly into the platform receptacle (between the 6-bolt payload interface and the 4-bolt worksite interface) are specified in Table 5-6.

Rationale: The ISS-WMI ranges are based on experimental data where only the lowest eigenvalues are reported. This data is intended to be used for resonance analysis by the User for when a payload is attached.

TABLE 5-6 ISS-WMI EFFECTIVE STIFFNESS

Assembly	Translational Stiffness	Rotational Stiffness
Grasped Platform Assembly (6-Bolt to Micro-Fixture)	33.047E+07 N/m	99.705E+04 Nm/rad
Mated Platform Assembly to Receptacle (6-Bolt to 4-Bolt)	22.61E+07 N/m	2.5E587E+05 Nm/rad

5.6.1.2.5 MASS

Mass ranges for the ISS-WMI assemblies are specified Table 5-7.

Rationale: ISS-WMI ranges are based on various combinations of target and connector configurations.

TABLE 5-7 ISS-WMI MASS RANGES

Assembly	Mass
ISS-WMI Receptacle	4.2-5.0 kg
ISS-WMI Platform	3.9-5.1 kg

5.6.1.2.6 ELECTRICAL INTERFACE

5.6.1.2.6.1 BLINDMATE CONNECTORS

The Small Platform Interface shall utilize blind mate connectors for dexterous robot manipulated Payload hardware such that they are connected automatically during the insertion process and disconnected automatically during removal.

Rationale: Based on ISS heritage

5.6.1.2.6.2 ELECTRICAL CONNECTORS

The electrical interface functions provided by the optional worksite connector are illustrated in Figure 38. The pin layout for a generic payload is defined in Figure 39. The specifications of the each of the 72 pins are detailed in Table 5-9. 40 out of 72 pins listed are designated for use by a generic user. These assigned pins are based on projected service requirements for a typical generic user.

The generic services package includes

- Three distinct communications wiring groups to support different communication standards (e.g. Ethernet, SpaceWire, MIL1553, etc.)
- Power lines at 126V or less
- Three discrete pairs to provide direct lines to the payload.

Non-designated spins are reserved for future TBD services that can be assigned to payloads requiring additional functionality.

Configurations are TBC pending the finalization or the DSG International Avionics System Interoperability Standards [AD-01] and International Power System Interoperability Standards [AD-03] standards. One of the power line pairs can be assigned a lower voltage if that becomes available on DSG.

TABLE 5-8 ISS-WMI ELECTRICAL INTERFACE PARAMETERS <TBR 5-7>

Function[1]	Operating Current (Amps)	Interface Voltage (volts)	Operating Power (kW)	Wire Type	# of Wires
Payload Power	*0 to 3.0 (TBR)*	*120 (TBR) (current dependent)*	*360 W (TBR)*	*22 AWG Wires (TBR)*	*2 (TBR)*
Payload Power Return	*0 to 3.0 (TBR)*	*120 (TBR) (current dependent)*	*360 W (TBR)*	*22 AWG Wires (TBR)*	*2 (TBR)*

NOTES:

1. These functions are available on 3 power line pairs so as to provide up to 1.08 kW.
2. Payload Power is intended for use by payloads installed on ISS-WMI interfaces.

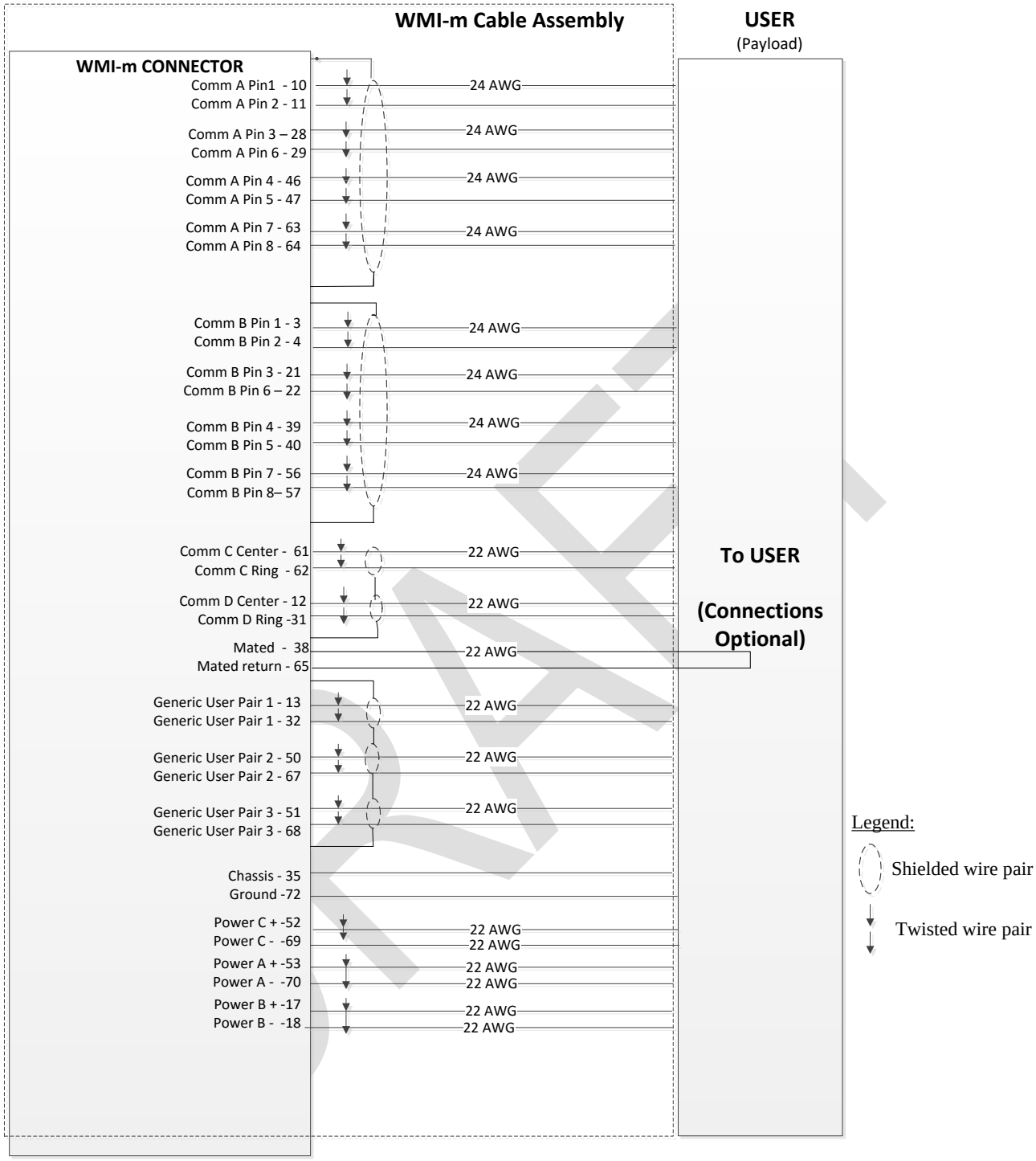

FIGURE 38 SERVICES PROVIDED TO USER BY THE GENERIC ELECTRICAL CONNECTOR

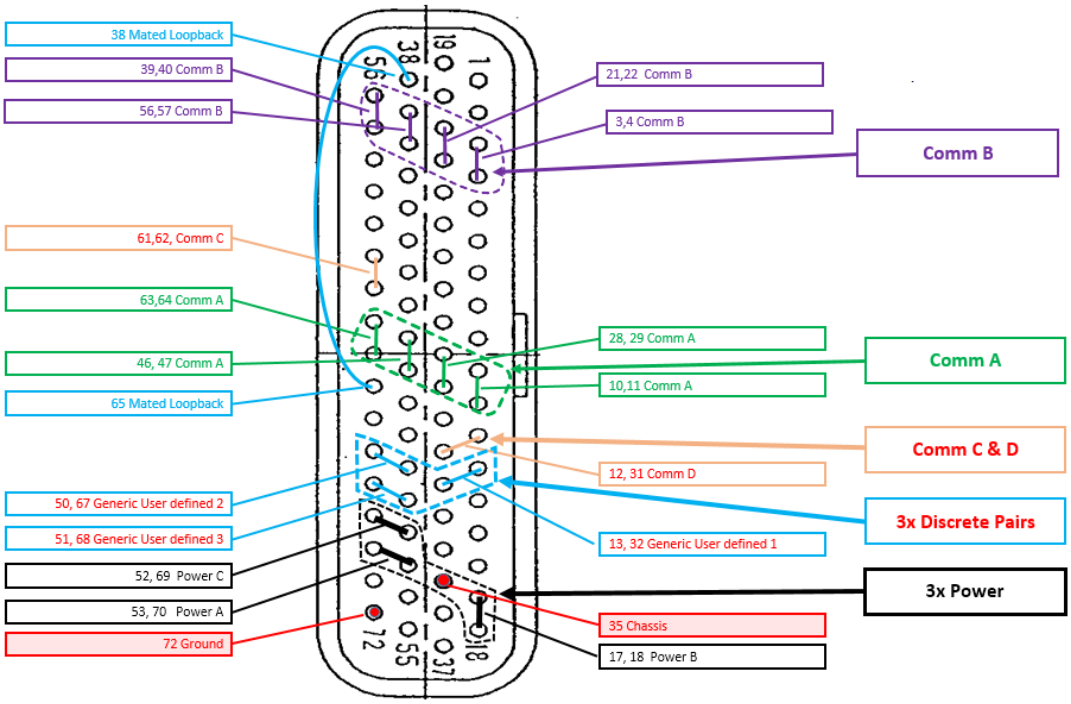

FIGURE 39 PIN LAYOUT FOR GENERIC PAYLOAD

TABLE 5-9 PROPOSED PINOUT FOR GENERIC USER PAYLOAD

Signal Name	Pin #	Description	Wire Gauge	Type	Max Current
COMM B DA+	**3**	Communication B -> 4 (Ethernet DA+)	24 awg	Twisted wire pair, overall shielded for the 4 pair bundle	2.3A
COMM B DA-	**4**	Communication B -> 3 (Ethernet DA-)	24 awg	Twisted wire pair, overall shielded for the 4 pair bundle	2.3A
COMM A DA+	**10**	Communication A ->11 (Ethernet DA+)	24 awg	Twisted wire pair, overall shielded for the 4 pair bundle	2.3A
COMM A DA-	**11**	Communication A ->10 (Ethernet DA-)	24 awg	Twisted wire pair, overall shielded for the 4 pair bundle	2.3A
Comm D Centre	**12**	Communication D -> 31 (MIL-1553B Center)	24 awg	Shielded Twisted wire pair	2.3A
Generic User def. 1	**13**	Generic User Defined Pair 1 -> 32	22 awg	Shielded Twisted wire pair	3.0A
Power B+	**17**	Power B Positive -> 18	22 awg	Twisted wire pair	3.0A
Power B -	**18**	Power B Return -> 17	22 awg	Twisted wire pair	3.0A
COMM B DB+	**21**	Communication B ->22 (Ethernet DB+)	24 awg	Twisted wire pair, overall shielded for the 4 pair bundle	2.3A
COMM B DB-	**22**	Communication B ->21 (Ethernet DB-)	24 awg	Twisted wire pair, overall shielded for the 4 pair bundle	2.3A
COMM A DB+	**28**	Communication A ->29 (Ethernet DB+)	24 awg	Twisted wire pair, overall shielded for the 4 pair bundle	2.3A

COMM A DB-	**29**	Communication A ->28 (Ethernet DB-)	24 awg	Twisted wire pair, overall shielded for the 4 pair bundle	2.3A
Comm D Ring	**31**	Communication D -> 12 (MIL-1553B Ring)	24 awg	Shielded Twisted wire pair	2.3A
Generic User def. 1	**32**	Generic User Defined Pair 1 -> 13	22 awg	Shielded Twisted wire pair	3.0A
Chassis	**35**	Chassis Ground	22 awg	Single wire	
Mated Loopback	**38**	Mated Loopback -> 65	22 awg	Single wire	
COMM B DC+	**39**	Communication B ->40 (Ethernet DC+)	24 awg	Twisted wire pair, overall shielded for the 4 pair bundle	2.3A
COMM B DC-	**40**	Communication B ->39 (Ethernet DC-)	24 awg	Twisted wire pair, overall shielded for the 4 pair bundle	2.3A
COMM A DC+	**46**	Communication A ->47 (Ethernet DC+)	24 awg	Twisted wire pair, overall shielded for the 4 pair bundle	2.3A
COMM A DC-	**47**	Communication A ->46 (Ethernet DC-)	24 awg	Twisted wire pair, overall shielded for the 4 pair bundle	2.3A
Generic User def. 2	**50**	Generic User Defined Pair 2 -> 67	22 awg	Shielded Twisted wire pair	3.0A
Generic User def. 3	**51**	Generic User Defined Pair 3 -> 68	22 awg	Shielded Twisted wire pair	3.0A
Power C +	**52**	Power C Positive -> 69	22 awg	Twisted wire pair	3.0A
Power A +	**53**	Power A Positive -> 70	22 awg	Twisted wire pair	3.0A
COMM B DD+	**56**	Communication B ->57 (Ethernet DD+)	24 awg	Twisted wire pair, overall shielded for the 4 pair bundle	2.3A
COMM B DD-	**57**	Communication B ->56 (Ethernet DD-)	24 awg	Twisted wire pair, overall shielded for the 4 pair bundle	2.3A
Comm C Centre	**61**	Communication C -> 62 (MIL-1553 Center)	24 awg	Shielded Twisted wire pair	2.3A
Comm C Ring	**62**	Communication C -> 61 (MIL-1553 Ring)	24 awg	Shielded Twisted wire pair	2.3A
COMM A DD+	**63**	Communication A ->64 (Ethernet DD+)	24 awg	Twisted wire pair, overall shielded for the 4 pair bundle	2.3A
COMM A DD-	**64**	Communication A ->63 (Ethernet DD-)	24 awg	Twisted wire pair, overall shielded for the 4 pair bundle	2.3A
Mated Loopback	**65**	Mated Loopback -> 38	22 awg	Single wire	
Generic User def. 2	**67**	Generic User Defined Pair 5 -> 50	22 awg	Shielded Twisted wire pair	3.0A
Generic User def. 3	**68**	Generic User Defined Pair 3-> 51	22 awg	Shielded Twisted wire pair	3.0A
Power C -	**69**	Power C Return -> 52	22 awg	Twisted wire pair	3.0A
Power A -	**70**	Power A Return -> 53	22 awg	Twisted wire pair	3.0A
Ground	**72**	Chassis Ground	22 awg	Single wire	

* The wires and connector pins are certified for 600V

Unlisted pins are reserved and should not be used

5.6.1.2.7 TARGET

Targets are required for robotic grasping of the dexterous fixture on the platform wedge. Two types of targets are supported.

1. Platform mounted targets: Used for alignment during robotic grasping of the platform dexterous fixture.
2. Receptacle leave behind targets: Can be used for grasping the ISS-WMI dexterous fixture and for alignment during insertion of the platform to the receptacle.

5.6.1.2.8 POWER INTERFACE

5.6.1.2.8.1 POWER QUALITY

The interface power quality shall be in accordance with the ISPSIS Power Standards.

5.6.1.2.8.2 FAULT PROTECTION

The ISS-WMI itself does not contain fault protection. All ISS-WMI internal connections are pass through wiring.

5.6.1.2.8.3 ELECTRICAL CONNECTOR DEADFACING

5.6.1.2.9 DATA INTERFACE

5.6.1.2.10 VIDEO INTERFACE

5.6.1.2.11 THERMAL INTERFACE

The operating temperature range of the ISS-WMI assembly is -67°F (-55°C) minimum and 140°F (+60°C) maximum **<TBR 5-8>**

Rationale: The ISS heritage WMI thermal interface is based on an SSRMS component, which was designed in accordance with the ISS natural environment thermal requirements. Operating range will need to be updated to reflect the lunar orbit natural environment for DSG.

5.6.1.2.12 ELECTROMAGNETIC ENVIRONMENT

5.6.1.2.13 GROUND PATH

5.6.1.2.14 CONTAMINATION ENVIRONMENT

5.6.1.2.14.1 DUST

5.6.1.3 VERIFICATION

5.6.2 REDUCED LOAD WEDGE MATING INTERFACE (WMI-)

5.6.2.1 GENERAL

The Wedge Mating Interface (WMI) is a family of reduced load robotics interfaces suitable for use as a platform for small ORUs, allowing for removal and replacement of payloads on orbit and can be used to secure payloads for launch. The design for this interface family is a reduced size version of the ISS-WMI.

The WMI comes in two versions WMI-medium and WMI-small, which are optimized for reduced load carrying capabilities. Medium and small designations are placeholders, and may be replaced with payload capacity dash numbers in a future update. Note that these WMI-medium and WMI-small interfaces are interoperable and swappable, but are not interoperable with the larger and more load capable ISS-WMI defined in Section 5.6.1. Note that the Common Mounting Interface requirements described in Section 5.4 support all WMI types.

5.6.2.1.1 INTERFACE FUNCTIONS

The WMI-medium and WMI-small interfaces are mass optimized for payloads with reduced mass and/or load requirements as compared to ISS-WMI payloads. Furthermore, the WMI-small is intended for on-orbit use only, and will nominally be launched without a payload. This permits a highly mass optimized small platform interface for use on orbit that is not required to support a payload under launch loads. These interfaces are compatible with the inner common bolt hole arrangement detailed in Figure 28.

The platform assembly (male wedge) is inserted fully into the platform receptacle (female bracket) via EVR or EVA. A tie-down bolt is actuated to secure the payload and connect the electrical worksite connector, if present. A conceptual model of the WMI-medium/WMI-small wedge platform assembly is shown in Figure 40. The platform design for WMI-small is similar to the WMI-medium but with additional mass optimization. The dexterous fixture and tie-down bolt arrangement concept shown on the platform assembly is included for reference. Dexterous fixture is TBD and will be documented in Section 7.0. Targets will be covered separately.

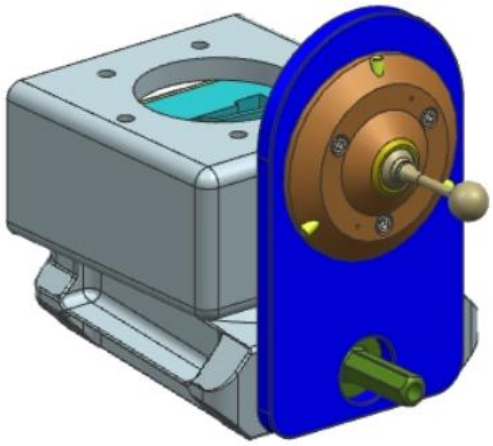

FIGURE 40 WMI-MEDIUM & WMI-SMALL CONCEPT

5.6.2.1.2 INTERFACE FUNCTIONS

The functions and features of WMI-medium/WMI-small are similar to those of the ISS-WMI. However, the on-station and launch load capacities of WMI are reduced to permit for the mass-optimized interface. Interface functions are as per Section5.6.1.1.2.

5.6.2.2 REQUIREMENTS

5.6.2.2.1 COORDINATE SYSTEMS

Coordinate systems for the WMI-medium and WMI-small versions will be defined as per Section 5.6.1.2.1. WMIP and WMIR frames will be located at the geometric center of the Tie-Down bolt interface for the reduced size platform and receptacle hardware.

5.6.2.2.2 ENVELOPES

The generic manipulator approach envelope to the small platform is defined as per Section 5.6.1.2.2. Specific values for the small platform approach envelope are provided based on design estimates for the TBD dexterous end-effector.

5.6.2.2.3 MECHANICAL INTERFACE

5.6.2.2.3.1 PLATFORM MOUNTING INTERFACE

5.6.2.2.3.2 PLATFORM MOUNTING FASTENERS

5.6.2.2.3.3 RECEPTACLE MOUNTING INTERFACE

5.6.2.2.3.4 RECEPTACLE MOUNTING FASTENERS

5.6.2.2.4 STRUCTURAL INTERFACE

5.6.2.2.4.1 PAYLOAD MASS CAPACITIES

The payload mass capacities of the interfaces as a function of the environment are specified in Table 5-10**<TBR 5-6**>. Mass capacities listed are not to be exceeded.

Rationale: Payload capacities are derived from the maximum loads that the interface can experience. Payloads that are launched will experience significantly higher acceleration and vibration environments than interfaces that are installed and handled on-orbit. The Center of Gravity (CG) offset is measured relative to the ORU mounting interface of the WMI platform assembly.

TABLE 5-10 PAYLOAD MASS CAPACITIES OF THE WMI INTERFACE

Environment	WMI-small P/L Capacity	WMI-medium P/L Capacity
Launch	7 kg with 0.1 m CG (TBR)	12 kg with 0.13 m CG (TBR)
On Station	50 kg with 1.0 m CG (TBR)	150 kg with 0.8 m CG (TBR)

5.6.2.2.4.2 MOUNTING INTERFACE LOADS

5.6.2.2.4.3 IMPACT LOADS

5.6.2.2.4.4 STIFFNESS

5.6.2.2.5 MASS

Mass ranges for the reduced loads WMI assemblies are specified in Table 5-11.

*Rationale: WMI mass is reduced based due to volumetric reduction of hardware relative to ISS-WMI. Actual component masses are to be determined **<TBD 5-3>**.*

TABLE 5-11 WMI MASS RANGES

Assembly	WMI-small Mass (kg)	WMI-medium Mass (kg)
WMI Receptacle	TBD	TBD
WMI Platform	TBD	TBD

5.6.2.2.6 ELECTRICAL INTERFACE

Electrical Interface details are defined as per Section 5.6.1.2.6

5.6.2.2.6.1 ELECTRICAL CONNECTORS

5.6.2.2.7 TARGET

Reduced load WMI targets are defined as per Section 5.6.1.2.7.

5.6.2.2.8 POWER INTERFACE

5.6.2.2.8.1 POWER QUALITY

5.6.2.2.8.2 THE INTERFACE POWER QUALITY SHALL BE IN ACCORDANCE WITH THE ISPSIS POWER STANDARDS FAULT PROTECTION

Fault protection requirements are

5.6.2.2.8.3 ELECTRICAL CONNECTOR DEADFACING

5.6.2.2.9 DATA INTERFACE

5.6.2.2.10 VIDEO INTERFACE

5.6.2.2.11 THERMAL INTERFACE

Reduced loads WMI assemblies will be designed to have identical thermal interface ranges as the ISS-WMI and are defined as per Section 5.6.1.2.11

5.6.2.2.12 ELECTROMAGNETIC ENVIRONMENT

5.6.2.2.13 GROUND PATH

5.6.2.2.14 CONTAMINATION ENVIRONMENT

5.6.2.2.14.1 DUST

5.6.2.3 VERIFICATION

5.6.3 DUST TOLERANT PLATFORM

5.6.3.1 GENERAL

The Dust Tolerant Platform (DTP) is a robotics interface suitable for use as a platform for small ORUs that have been exposed to dust contamination from operations such as surface missions. The DTP allows for the handling, removal and replacement of payloads that may have been contaminated with surface dust and regolith.

5.6.3.1.1 INTERFACE DESCRIPTION

5.6.3.1.2 INTERFACE FUNCTIONS

5.6.3.2 REQUIREMENTS

5.6.3.2.1 COORDINATE SYSTEMS

5.6.3.2.2 ENVELOPES

5.6.3.2.3 MECHANICAL INTERFACE

5.6.3.2.3.1 PLATFORM MOUNTING INTERFACE

5.6.3.2.3.2 PLATFORM MOUNTING FASTENERS

5.6.3.2.3.3 RECEPTACLE MOUNTING INTERFACE

5.6.3.2.3.4 RECEPTACLE MOUNTING FASTENERS

5.6.3.2.4 STRUCTURAL INTERFACE

5.6.3.2.4.1 MOUNTING INTERFACE LOADS

5.6.3.2.4.2 IMPACT LOADS

5.6.3.2.4.3 STIFFNESS

5.6.3.2.5 MASS

5.6.3.2.6 ELECTRICAL INTERFACE

5.6.3.2.6.1 ELECTRICAL CONNECTORS

5.6.3.2.7 TARGET

5.6.3.2.8 POWER INTERFACE

5.6.3.2.8.1 POWER QUALITY

5.6.3.2.8.2 FAULT PROTECTION

5.6.3.2.8.3 ELECTRICAL CONNECTOR DEADFACING

5.6.3.2.9 DATA INTERFACE

5.6.3.2.10 VIDEO INTERFACE

5.6.3.2.11 THERMAL INTERFACE

5.6.3.2.12 ELECTROMAGNETIC ENVIRONMENT

5.6.3.2.13 GROUND PATH

5.6.3.2.14 CONTAMINATION ENVIRONMENT

5.6.3.2.14.1 DUST

5.6.3.3 VERIFICATION

5.6.4 FLUID TRANSFER PLATFORM

5.6.4.1 GENERAL

The Fluid Transfer Platform (FTP) is a robotics interface suitable for use as a platform for small ORUs that are required to provide fluid transfer. The FTP allows for the handling, removal and replacement of payloads, which require to transfer fluid such as coolant.

5.6.4.1.1 INTERFACE DESCRIPTION

5.6.4.1.2 INTERFACE FUNCTIONS

5.6.4.2 REQUIREMENTS

5.6.4.2.1 COORDINATE SYSTEMS

5.6.4.2.2 ENVELOPES

5.6.4.2.3 MECHANICAL INTERFACE

5.6.4.2.3.1 PLATFORM MOUNTING INTERFACE

5.6.4.2.3.2 PLATFORM MOUNTING FASTENERS

5.6.4.2.3.3 RECEPTACLE MOUNTING INTERFACE

5.6.4.2.3.4 RECEPTACLE MOUNTING FASTENERS

5.6.4.2.4 STRUCTURAL INTERFACE

5.6.4.2.4.1 MOUNTING INTERFACE LOADS

5.6.4.2.4.2 IMPACT LOADS

5.6.4.2.4.3 STIFFNESS

5.6.4.2.5 MASS

5.6.4.2.6 ELECTRICAL INTERFACE

5.6.4.2.6.1 ELECTRICAL CONNECTORS

5.6.4.2.7 TARGET

5.6.4.2.8 POWER INTERFACE

5.6.4.2.8.1 POWER QUALITY

5.6.4.2.8.2 FAULT PROTECTION

5.6.4.2.8.3 ELECTRICAL CONNECTOR DEADFACING

5.6.4.2.9 DATA INTERFACE

5.6.4.2.10 VIDEO INTERFACE

5.6.4.2.11 THERMAL INTERFACE

5.6.4.2.12 ELECTROMAGNETIC ENVIRONMENT

5.6.4.2.13 GROUND PATH

5.6.4.2.14 CONTAMINATION ENVIRONMENT

5.6.4.2.14.1 DUST

5.6.4.3 VERIFICATION

6.0 LARGE ORU PLATFORM INTERFACE

TBD

6.1 GENERAL

6.1.1 INTERFACE DESCRIPTION

6.1.2 INTERFACE FUNCTIONS

6.2 REQUIRMENTS, ORU TO LARGE PLATFORM INTERFACE

6.2.1 COORDINATE SYSTEMS

6.2.2 ENVELOPES

6.2.2.1 PAYLOAD ON ORBIT ENVELOPE

6.2.2.2 EVA STAYOUT ZONES

6.2.3 MECHANICAL INTERFACE

6.2.3.1 MOUNTING BOLT HOLE PATTERNS

6.2.3.2 FASTENERS

6.2.4 STRUCTURAL INTERFACE

6.2.4.1 PAYLOAD MASS AND CG CAPABILITIES

6.2.4.2 OPERATIONAL LOADS

6.2.4.2.1 FUNDAMENTAL FREQUENCY

6.2.4.3 ON ORBIT LOADS

6.2.4.4 DEFLECTION

6.2.4.5 WEIGHT

6.2.5 ELECTRICAL INTERFACE

6.2.5.1 ELECTRICAL CONNECTORS

6.2.6 POWER INTERFACE

6.2.6.1 POWER QUALITY

6.2.7 THERMAL INTERFACE

6.2.8 ELECTROMAGNETIC ENVIRONMENT

6.3 VERIFICATION, ORU TO LARGE PLATFORM INTERFACE

6.4 REQUIRMENTS, VEHICLE/MODULE TO LARGE RECEPTACLE INTERFACE

6.4.1 COORDINATE SYSTEMS

6.4.2 ENVELOPES

6.4.2.1 PAYLOAD ON-ORBIT ENVELOPE

6.4.2.2 EVA STAYOUT ZONES

6.4.3 MECHANICAL INTERFACE

6.4.3.1 MOUNTING BOLT HOLE PATTERNS

6.4.3.2 FASTENERS

6.4.4 STRUCTURAL INTERFACE

6.4.4.1 PAYLOAD MASS AND CG CAPACITIES

6.4.4.2 OPERATIONAL LOADS

6.4.4.2.1 FUNDAMENTAL FREQUENCY

6.4.4.3 ON-ORBIT LOADS

6.4.4.4 DEFLECTION

6.4.4.5 WEIGHT

6.4.5 ELECTRICAL INTERFACE

6.4.5.1 ELECTRICAL CONNECTORS

6.4.6 POWER INTERFACE

6.4.6.1 POWER QUALITY

6.4.7 THERMAL INTERFACE

6.4.8 ELECTROMAGNETIC ENVIRONMENT

6.4.9 CONTAMINATION ENVIRONMENT

6.5 VERIFICATION, VEHICLE/MODULE TO LARGE RECEPTACLE INTERFACE

7.0 DEXTEROUS FIXTURE INTERFACE

7.1 GENERAL

The dexterous fixture interface class is comprised of fixtures that support the robotic handling of smaller payloads, ORUs, and tools. Dexterous fixtures will also be used as the primary robotic interface element on payload interfaces such as the small and large platform interface classes defined within this document.

The dexterous fixture interface family share a dexterous fixture mounting interface plane (Figure 4) between the fixture and the user hardware to which the robot will grasp. This establishes a standard interface for members of the dexterous interface family.

Details and requirements pertaining to specific dexterous fixture interface implementations are detailed in Section 7.4. Dexterous fixture implementations will be defined for both standard and dust tolerant configurations.

7.1.1 INTERFACE DESCRIPTION

The common small fixture mounting interface establishes a generic mounting interface standard for these fixtures. The goal is to provide the hardware designers with the simplest possible mounting interface.

7.1.2 INTERFACE FUNCTIONS

7.2 REQUIREMENTS

7.2.1 COORDINATE SYSTEMS

7.2.2 ENVELOPES

7.2.3 MECHANICAL INTERFACE

7.2.3.1 MOUNTING BOLT HOLD PATTERNS

7.2.3.2 FASTENERS

7.2.4 STRUCTURAL INTERFACE

7.2.4.1 MOUNTING INTERFACE LOADS

7.2.4.2 IMPACT LOADS

7.2.4.3 NATURAL FREQUENCY (FOR MANIPULATION)

7.2.4.4 STIFFNESS (FOR STABILIZATION)

7.2.4.5 UMBILICAL MECHANISM MATE LOADS

7.2.4.6 WEIGHT

7.2.5 ELECTRICAL INTERFACE

7.2.5.1 CONNECTORS

7.2.6 TARGET

7.2.7 POWER INTERFACE

7.2.7.1 POWER QUALITY

7.2.7.2 FAULT PROTECTION

7.2.7.3 ELECTRICAL CONNECTOR DEADFACING

7.2.8 DATA INTERFACE

7.2.9 VIDEO INTERFACE

7.2.10 THERMAL INTERFACE

7.2.11 ELECTROMAGNETIC ENVIRONMENT

7.2.12 CONTAMINATION ENVIRONMENT

7.2.12.1 DUST

7.3 VERIFICATION

7.4 SPECIFIC DEXTEROUS FIXTURE INTERFACES

7.4.1 STANDARD DEXTEROUS FIXTURE INTERFACE

7.4.1.1 GENERAL

7.4.1.2 REQUIREMENTS

7.4.1.3 VERIFICATION

7.4.2 DUST TOLERANT DEXTEROUS FIXTURE INTERFACE

7.4.2.1 GENERAL

The Dust Tolerant Dexterous Fixture (DTDF) is a robotics interface suitable for the handling of small ORUs or platforms that have been exposed to dust contamination from operations such as surface missions. The DTDF allows for the handling, removal and replacement of payloads that may have been contaminated with surface dust and regolith.

7.4.2.2 REQUIREMENTS

7.4.2.3 VERIFICATION

8.0 ORU DIRECT INTERFACE

ORU direct interfaces are currently TBD.

8.1 GENERAL

8.1.1 INTERFACE DESCRIPTION

8.1.2 INTERFACE FUNCTIONS

8.2 REQUIREMENTS, ORU TO SPECIFIC MATE/DE-MATE INTERFACE

8.2.1 COORDINATE SYSTEMS

8.2.2 ENVELOPES

8.2.2.1 LOCATING

8.2.3 MECHANICAL INTERFACE

8.2.3.1 MOUNTING BOLT HOLD PATTERNS

8.2.3.2 FASTENERS

8.2.4 STRUCTURAL INTERFACE

8.2.4.1 PAYLOAD MASS CAPABILITIES (LAUNCH AND ON STATION)

8.2.4.2 IMPACT LOADS

8.2.4.3 BENDING LOADS

8.2.4.4 WEIGHT

8.2.5 ELECTRICAL INTERFACE

8.2.5.1 ELECTRICAL CONNECTORS

8.2.6 TARGET

8.2.7 POWER INTERFACE

8.2.7.1 POWER QUALITY

8.2.8 DATA INTERFACE

8.2.9 VIDEO INTERFACE

8.2.10 ELECTROMAGNIETIC ENVIRONMENTS

8.2.10.1 ELECTROMAGNETIC COMPATIBILITY

8.2.10.2 GROUNDING

8.2.10.3 BONDING

8.3 VERIFICATION, ORU TO SPECIFIC MATE/DE-MATE INTERFACE (END)

8.4 REQUIREMENTS, VEHICLE/MODULE TO SPECIFIC RECEPTACLE INTERFACE

8.4.1 COORDINATE SYSTEMS

8.4.2 ENVELOPES

8.4.2.1 LOCATING

8.4.3 MECHANICAL INTERFACE

8.4.3.1 MOUNTING BOLT HOLE PATTERNS

8.4.3.2 FASTENERS

8.4.4 STRUCTURAL INTERFACE

8.4.4.1 BENDING LOADS

8.4.4.2 IMPACT LOADS

8.4.4.3 WEIGHT

8.4.5 ELECTRICAL INTERFACE

8.4.5.1 ELECTRICAL CONNECTORS

8.4.6 TARGET

8.4.7 POWER INTERFACE

8.4.7.1 POWER QUALITY

8.4.8 DATA INTERFACE

8.4.9 VIDEO INTERFACE

8.4.10 ELECTROMAGNETIC ENVIRONMENTS

8.4.10.1 ELECTROMAGNETIC COMPATIBILITY

8.4.10.2 GROUNDING

8.4.10.3 BONDING

8.4.11 CONTAMINATION ENVIRONMENT

8.4.11.1 DUST

8.5 VERIFICATION, VEHICLE/MODULE TO SPECIFIC RECEPTACLE INTERFACE

9.0 POSSIBLE FUTURE TOPICS FOR STANDARDIZATION

TBD

9.1 HUMAN MACHINE INTERFACE (HMI)

APPENDIX A: **ACRONYMS AND ABBREVIATIONS**

A/L	Airlock
AD	Applicable Document
ATV	Automated Transfer Vehicle
CBM	Common Berthing Mechanism
CDD	Concept Description Document
CS	Coordinate System
CSA	Canadian Space Agency
DSG	Deep Space Gateway
DRM	Design Reference Mission
EE	End Effect
EM	Exploration Mission
ERA	European Robotic Arm
ESA	European Space Agency
EVA	Extravehicular Activity
EVR	Extravehicular Robotics
FF	Free Flyer
FFGF	Free Flyer Grapple Fixture
FSE	Flight Support Equipment
GF	Grapple Fixture
HEOMD	Human Exploration and Operations Mission Directorate
IDD	Interface Definition Document
IDSS	International Docking System Standard
IERIS	International External Robotic Interoperability System
ISS	International Space Station
IVA	Intravehicular Activity
JAXA	Japan Aerospace Exploration Agency
LFM	Large Fixture Mounting (Coordinate System)
LPGF	Low Profile Grapple Fixture
MCB	Multilateral Coordination Board
MMI	Man Machine Interface
MSS	Mobile Servicing System
NASA	National Aeronautics and Space Administration
NSTS	NASA Space Transportation System
ORU	On-orbit Relocatable or Replaceable Unit

OTCM	ORU/Tool Changeout Mechanism *(from ISS heritage)*
RD	Reference Document
SPDM	Special Purpose Dexterous Manipulator *(from ISS heritage)*
SPM	Small Platform Mounting (Coordinate System)
SRM	Small Receptacle Mounting (Coordinate System)
SRMS	Shuttle Remote Manipulator System
SSP	Space Station Program
SSRMS	Space Station Remote Manipulator System *(from ISS heritage)*
TBC	To Be Confirmed
TBD	To Be Determined
TBR	To Be Resolved
UTS	Ultimate Tensile Strength
WMI	Wedge Mating Interface *(from ISS heritage)*

APPENDIX B: **GLOSSARY**

ALLOCATION

The portioning of resources and accommodations to the ISS users. Total ISS resources and accommodations are allocated between system and utilization. Utilization resources and accommodations are allocated between International Partners.

ASSEMBLY PHASE

Refers to the time period starting with FEL and ending with the landing of the last flight in the assembly sequence.

CAPTURE

An operation where a manipulator grasps onto a free-flying vehicle (i.e. a robotic interface fixture that is not stationary/rigid with respect to the base of the manipulator).

CARGO CARRIER

Element of a transportation vehicle that provides capability to carry cargo.

GRASP/GRAPPLE

An operation where a manipulator secures itself onto a robotic interface fixture which is stationary/rigid with respect to the base of the manipulator. Grasp is commonly used for smaller interfaces and grapple is commonly used for larger fixtures.

INTERFACE DEVELOPER

A party who is involved with the manufacture of external robotics interfaces. Developer level requirements deal with detailed design specifications that are required to ensure proper functionality and compatibility of the designed robotics interface.

INTERFACE USER

A party who is will directly install an external robotics interface on their hardware. User level requirements deal with specifications pertinent to the mounting and installation interface, and not to the detailed design of the external robotic interface components.

ON-ORBIT REPLACEABLE UNIT (ORU)

A piece of equipment that is designed for removal and replacement as a unit on orbit by either EVA or EVR.

APPENDIX C: **OPEN WORK**

Table C-1 lists the specific To Be Determined (TBD) items in the document that are not yet known. The TBD is inserted as a placeholder wherever the required data is needed and is formatted in bold type within brackets. The TBD item is numbered based on the section where the first occurrence of the item is located as the first digit and a consecutive number as the second digit (i.e., <TBD 4-1> is the first undetermined item assigned in Section 4 of the document). As each TBD is resolved, the updated text is inserted in each place that the TBD appears in the document and the item is removed from this table. As new TBD items are assigned, they will be added to this list in accordance with the above described numbering scheme. Original TBDs will not be renumbered.

TABLE C-1 TO BE DETERMINED ITEMS

TBD	Section	Description
<TBD 4-2>	4.4.1.1.3	LPGF receptacle connector details are to be determined
<TBD 4-3>	4.4.2.2.5	Free flyer grapple fixture targets for machine vision compatibility and autonomy are to be determined.
<TBD 5-2>	5.6.1.2.2, 5.6.2.2.2	Specific small platform approach envelope values to be determined (dependent on dexterous end-effector selection)
<TBD 5-3>	5.6.2.2.5	WMI-small and WMI-medium masses are to be determined

Table C-2 lists the specific To Be Resolved (TBR) issues in the document that are not yet known. The TBR is inserted as a placeholder wherever the required data is needed and is formatted in bold type within brackets. The TBR issue is numbered based on the section where the first occurrence of the issue is located as the first digit and a consecutive number as the second digit (i.e., <TBR 4-1> is the first unresolved issue assigned in Section 4 of the document). As each TBR is resolved, the updated text is inserted in each place that the TBR appears in the document and the issue is removed from this table. As new TBR issues are assigned, they will be added to this list in accordance with the above described numbering scheme. Original TBRs will not be renumbered.

TABLE C-2 TO BE RESOLVED ISSUES

TBR	Section	Description
<TBR 3-1>	3.1.1	To be resolved if direct interfaces for large ORUs are to be included in IERIS
<TBR 4-2>	4.2.4.1	Common large fixture mounting loads to be resolved
<TBR 4-4>	4.5.2.2.1	FFGF Impact loads to be resolved
<TBR 4-5>	4.4.1.2.4.1	LPGF electrical interface services between user and manipulator to be resolved
<TBR 4-6>	4.4.1.2.4.1	LPGF electrical interface details between user and manipulator to be resolved (max power, operating current, voltage range, wire type, and # of wires/contacts)
<TBR 4-7>	4.2.4.2	Large Fixture user stiffness requirements to be finalized
<TBR 4-8>	4.4.1.2.3.1	Mass limit of LPGF is to be resolved
<TBR 5-2>	5.6.1.2.3.2	Platform mounting fastener UTS value is to be resolved
<TBR 5-3>	5.6.1.2.3.4	Receptacle Mounting fastener UTS value is to be resolved
<TBR 5-5>	5.4.3.1	Dimensions of reduced size WMI mounting bolt hole patterns to be confirmed
<TBR 5-6>	5.6.1.2.4.1 5.6.2.2.4.1	WMI-MEDIUM, WMI-SMALL payload capacities are to be confirmed
<TBR 5-7>	5.6.1.2.6.2	ISS-WMI electrical interface details between user and manipulator to be resolved (max power, operating current, voltage range, wire type, and # of wires/contacts)
<TBR 5-8>	5.6.1.2.11	Thermal interface for ISS-WMI to be verified for DSG environment

APPENDIX D: **SYMBOLS DEFINITION**

$\boldsymbol{\omega} = [\ \omega_X,\ \omega_Y,\ \omega_Z\ ]_T$	Angular Velocity Vector
XX	Basic (Theoretical) Dimension
⟷	Between
℄	Centerline
○	Circularity
◎	Concentricity
□⊢	Datum Feature
↧	Depth / Deep
∅	Diameter
△	Difference
TRUE	Dimension in a view that does not show true feature shape
▱	Flatness
θ_Y	Pitch Angle (relative to Y Axis)
⌖	Position
φ_X	Roll Angle (relative to X Axis)
SR	Spherical Radius
Ψ_Z	Yaw Angle (relative to Z Axis)

APPENDIX E: DEVELOPER LEVEL REQUIREMENTS

User level requirements comprise the majority of the main body of IERIS, and are of primary interest to those who desire to mount an external robotics interface onto hardware. Developer level requirements include detailed design requirements specific to instances of external robotic interfaces. These requirements are of interest to those responsible for developing external interfaces, and are more extensive than those of a general User.

Where applicable, external developer level requirement documentation will have been referenced in the specific implementation sections of each interface class. Interfaces without sufficient external documentation will have developer level requirements defined in the sections below.

E.1 LARGE FIXTURE INTERFACES DEVELOPER LEVEL REQUIREMENTS

E.1.1 LOW PROFILE GRAPPLE FIXTURE (LPGF)

E.1.1.1 ENVELOPES

E.1.1.1.1 CAPTURE ENVELOPE

The capture envelope for the LPGF is shown below in Figure 41. The capture envelope represents the volume required for LPGF alignment and engagement. The clearance approach envelope for an LPGF is defined in Section 4.4.1.2.1.1.

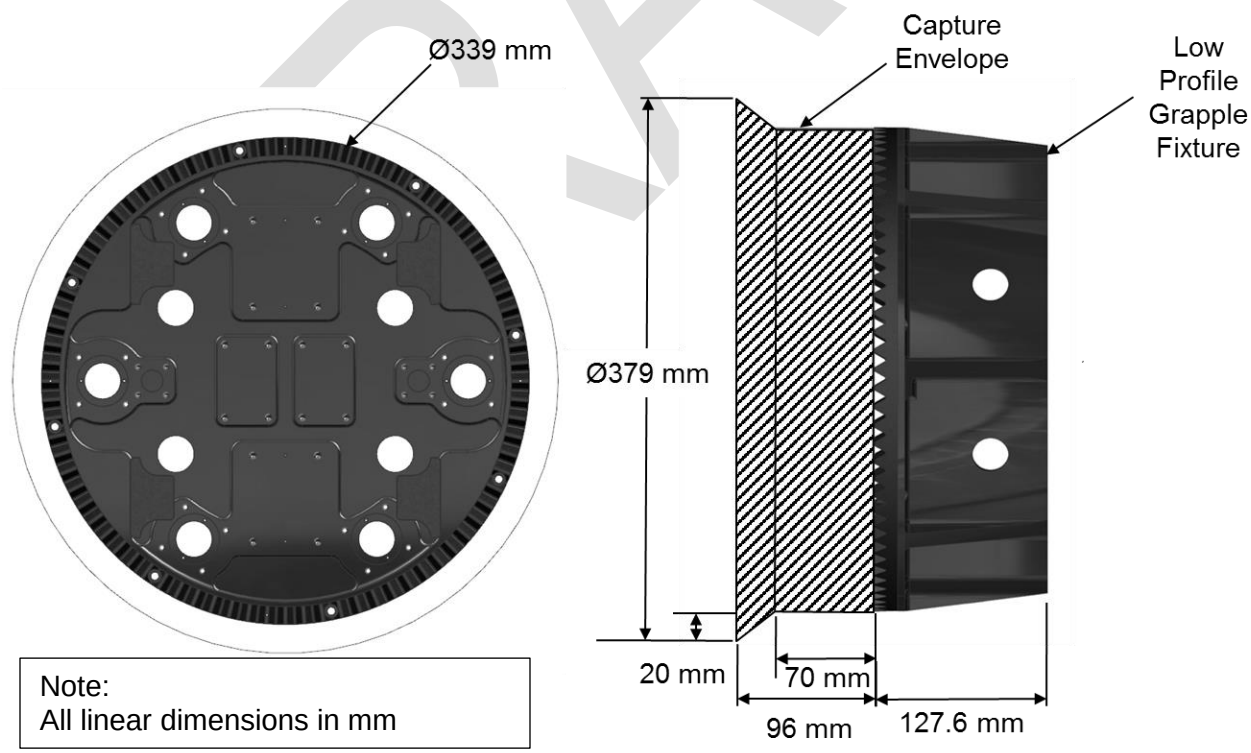

FIGURE 41 LPGF CAPTURE ENVELOPE

E.1.2 FREE FLYER GRAPPLE FIXTURE (FFGF)

E.1.2.1 ENVELOPES

E.1.2.1.1 CAPTURE ENVELOPE

The FFGF shall be capable of being captured and rigidized by the EE with the initial misalignments depicted in Figure 42. The clearance approach envelope for the FFGF is defined in Section 4.4.2.2.1.1.

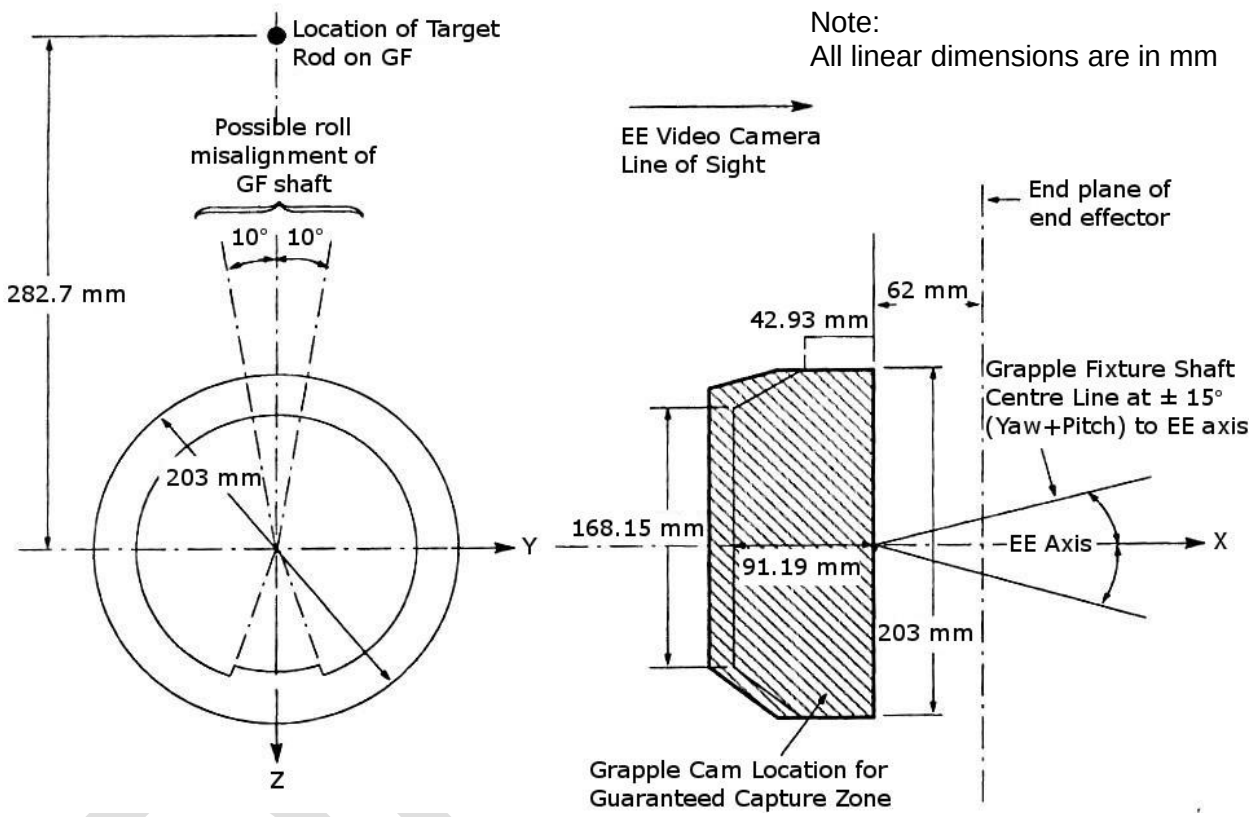

FIGURE 42 FFGF CAPTURE ENVELOPE

E.1.2.2 STRUCTURAL INTERFACE

E.1.2.2.1 IMPACT LOADS

The FFGF shall withstand Impact Loads defined in Table E-1and illustrated in Figure E-1 **<TBR 4-4>**.

TABLE E-1 FFGF IMPACT LOAD

FFGF Component	Impact Load	Impact Location	Impact Direction
Grapple Shaft	890 N (TBR)	Any point on Grapple Buffer	up to 20º from $+X_{FFGF}$
Cam Arms	831 N (TBR)	Any point on outer surface	along $+X_{FFGF}$

Abutment Plate	445 N (TBR)	Any point on outer surface	along $+X_{FFGF}$
Grapple Target Plate	445 N (TBR)	Any point on outer surface	along $+X_{FFGF}$
Notes: 1. For the structural analysis purposes, the impact loads are assumed as static.			

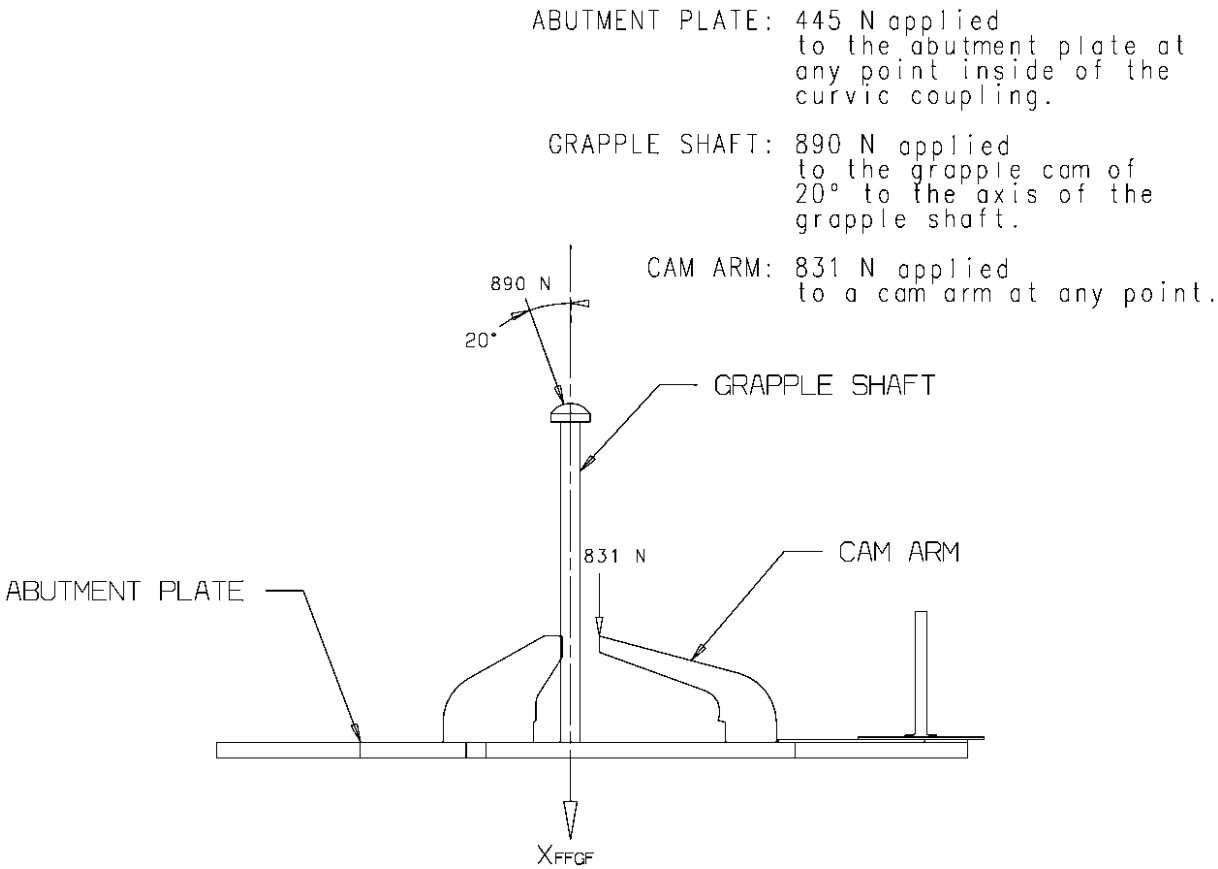

FIGURE E-1 GRAPPLE FIXTURE IMPACT LOADS

E.1.2.2.2 CAPTURE LOADS

During capture, the grapple fixture shall be able to transmit the forces between the End Effector and the Payload as defined in Table E-2.

During its lifetime, the FFGF shall be able to withstand the total number of captures as defined in Table E-2.

TABLE E-2 FFGF TO PAYLOAD OPERATING LOAD LIMITS

Max. Side Force	Max. Axial Force	Max. No. of Cycles
1,423 N	9853 N	150
3,025 N	9853 N	1
Total:		151

Notes:

1. Side Force is total force applied to Grapple Shaft, at or below Grapple Gam; applied in Y-Z plane.
2. Axial Load is total force applied to Grapple Cam along + X_{FFGF}.
3. Untested safety factors of 1.25 for yield and 2.0 for ultimate to be used.
4. For the structural analysis purposes, capture loads to be assumed as static.

E.2 SMALL ORU PLATFORM

E.2.1 WEDGE MATING INTERFACE (WMI)

TBD

APPENDIX F: SUMMARY OF KEY TRADE OFF STUDIES

Lessons learned from robotic operations on board the International Space Station (ISS) and the results of key trade studies have been used to inform the requirements developed for this International External Robotic Interoperability Standards. The sections below document the key findings of the following trade studies;

1. Contingency Release Methods – assessment of options for implementing a contingency release function at a robot end-effector/grapple fixture interface
2. Methods for Controlling I/F Loads During Berthing Operations – assessment of options for protecting against excessive interface loads during off-nominal robotic berthing operations
3. ORU Style: Platform vs. Direct Handling – assessment of different approaches to incorporating robotically compatible interfaces into an ORU.

F.1 CONTINGENCY RELEASE METHODS

F.1.1 PURPOSE

The purpose of the contingency release trade was to compare options for implementing a grapple fixture contingency release function in future exploration missions. A contingency release function is a backup method of separating a robotic end-effector from its grapple fixture in the event that a failure occurs which results in a loss of function of its primary and redundant release methods.

F.1.2 BACKGROUND

Historically, on the NASA Space Transportation System (NSTS) and the International Space Station, the grapple fixture contingency release function has been implemented through features on either the active (end-effector) or passive (grapple fixture) side.

Contingency release methods implemented on the passive side of the interface include,

- Flight Releasable Grapple Fixture (FRGF), shown in Figure F-1 and used throughout the Space Shuttle and ISS programs, which incorporated an EVA drive to release the grapple shaft in the event that the end-effector failed.

FIGURE F-1 FLIGHT RELEASABLE GRAPPLE FIXTURE

- Tie-Down Separation Plane (TDSP), shown in Figure F-2 and used on the H-II Transfer Vehicle (HTV), is a commandable mechanism to mechanically release the entire grapple fixture from the vehicle.

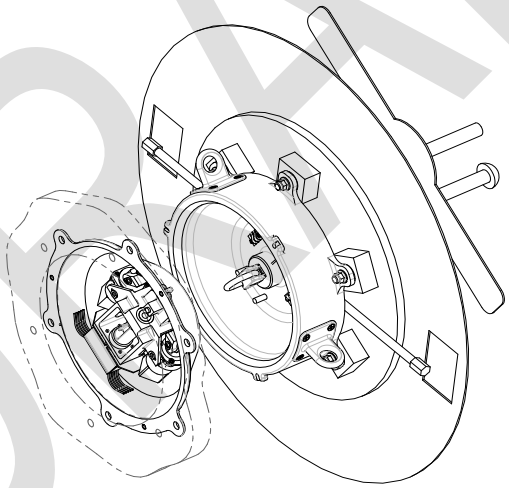

FIGURE F-2 TIE-DOWN SEPARATION PLANE

Contingency release methods implemented on the active side of the interface include,

- The NSTS Shuttle Robotic Arm End-Effector incorporated a commandable backup release mechanism to open the snares and release the grapple fixture. While the backup release method was checked out on each mission to verify function, it was never used operationally to perform an emergency release of a payload.

- The Canadarm2 End-Effector on the ISS incorporated a redundant electromechanical drive capability to provide functional fault tolerance. The end-effector also included an EVA drive to provide the ability to manually unlatch the end-effector from a grapple fixture.
- The Dextre End-Effector on the ISS incorporated backup electromechanical drive capability as well as an EVA drive to manually open the jaws of the mechanism to release a grasped fixture.

F.1.3 TRADE

To compare the various methods of providing a contingency release function, each method was assessed using the following figures of merit;

1. *Time Criticality*

- Where the interface is used can dictate the type of contingency release required (EVA vs. commandable)
- If the hazard associated with a loss of release capability has a short time to effect then EVA methods for release are not suitable.
- Release of Free-Flyers / Visiting Vehicles typically require contingency release function to be remotely commandable

2. *Mass/Volume*

- Implementation of a contingency release function on the end-effector/manipulator or grapple fixture/payload impacts the total life cycle mass
- Allocation of the contingency release function to the end-effector may permit a mass savings when the total mission life cycle is considered
- For example,
    - Flight Releasable Grapple Fixture (FRGF) on ISS provides an EVA release function and has a unit mass of ~12 kg
    - Flight Standard Grapple Fixture (FSGF) does not include the EVA release mechanism and has a unit mass of only ~8 kg
    - 4kg mass savings per use
- Lowest life cycle mass will depend on the total quantities of end-effectors and grapple fixtures in the mission and their associated contingency release mechanism mass
- Release functions implemented on the grapple fixture side can impact size, particularly if it is an EVA release function where EVA access must be possible while end-effector is attached

3. *Verification*

- Implementation of a contingency release function on the end-effector/manipulator or grapple fixture/payload impacts the verification and total life cycle costs
- Allocation of the contingency release function to the grapple fixture requires each unit to be tested, impacting the recurring costs of grapple fixtures

4. *Debris Generation*

- Some historical contingency release implementations generate debris should they ever be operated
    - FRGF implementation releases a grapple shaft which must be retrieved by EVA from the end-effector snare cables
    - ISS Visiting Vehicle (HTV, Cygnus, Dragon) grapple fixture release systems result in the release of an entire >12 kg grapple fixture assembly which may or may not be restrained in the end-effector snare cables
- Debris-free release implementations are preferred to avoid potential hazards associated with unconstrained debris

5. *Compatibility with Autonomy*

- Future robotic systems aim to implement a larger degree of automation, including Failure Detection, Isolation, and Recovery (FDIR)
- An EVA implementation for contingency release precludes automated FDIR responses

6. *Complexity*

- Depending on criticality of loss of function failure (critical vs. catastrophic), one or two methods of contingency release may be required to satisfy safety requirements
    - Critical Hazard = Loss of Mission
        - Requires 1 fault tolerance (primary and redundant methods)
    - Catastrophic Hazard = Loss of Vehicle and/or Life
        - Requires 2 fault tolerance (primary, redundant, and tertiary methods)
- A single method of release to control critical hazards may be simply implemented through redundancy in the end-effector
- A second method of release to control catastrophic hazards may require a third control string which adds complexity, cost, and mass
    - An EVA release mechanism may be the simplest option

The tables below provide a summary of the comparison between the various contingency release implementation options.

TABLE F-1 GRAPPLE FIXTURE VS. END-EFFECTOR IMPLEMENTATION

Contingency Release Implementation	Pros	Cons
Grapple Fixture Side	- Potentially higher reliability release function since verification of function is more recent (test before launch)	- Higher recurring costs for grapple fixture - Can have higher life cycle mass due to quantity of grapple fixtures used in a mission* - Restricted access if release is through EVA
End-Effector Side	- Can have lower life cycle mass due to low quantity of end-effectors*	- Single mechanism for release throughout mission life (dormant failure risk if no checkout capability exists)

*Key discriminator

TABLE F-2 EVA VS. COMMANDABLE IMPLEMENTATION

Contingency Release Implementation	Pros	Cons
EVA	- Can be simplest option	- Does not support automated FDIR - Not suitable for time-critical applications*
Commandable	- Supports automated FDIR - Required for time-critical applications*	- Implementation may be complex if tertiary release capability needed

*Key discriminator

F.1.4 CONCLUSIONS & RECOMMENDATIONS

Based on the results of the trade, the following recommendations were developed for the International External Robotic Interoperability Standards:

- Contingency release functions shall separate the interface without generating debris
- Contingency release functions shall be implemented on the end-effector side of the interface
- All contingency release functions for free-flyer capture fixtures shall be remotely commandable to separate (i.e. not require EVA). Contingency release functions for non-free-flyer capture fixtures may be EVA but commandable implementations are preferred
- Contingency release functions should be implemented in a manner which enables on-orbit checkout/verification of function

NOTE: The integration of a contingency release mechanism to de-mate a payload from a robot end-effector may introduce additional failure modes in the design and therefore should be technically justified and its implications considered in the general failure/safety analysis.

F.2 METHODS FOR CONTROLLING I/F LOADS DURING BERTHING OPERATIONS

F.2.1 PURPOSE

The purpose of this trade was to assess options for protecting against high interface loads that can be generated during off-nominal berthing to a mechanism external to the robotic system. Through the trade, determine if any requirements should be added to the body of the International External Robotic Interoperability Standards and identify whether a handshaking standard is required between an external berthing mechanism and the robotic system.

F.2.2 BACKGROUND

One of the historical concerns with robotic berthing operations on the ISS has been the high loads that can be generated if an external active berthing mechanism (like the Common Berthing Mechanism) is attempting to rigidize an interface while the manipulator is not in a compliant mode (i.e. has mechanical brakes engaged). Typically, the automated response of a manipulator to a fault condition (termed the “Safing response”) is to halt all motion through the application of brakes and inhibiting of motors. Analysis is typically performed to define the necessary safety controls to implement in order to protect against the build-up of excessive loads in the unlikely event that the off-nominal/failure condition occurs.

For future missions, a more robust approach that mitigates the need for extensive analysis is required.

F.2.3 TRADE

The strategies considered for controlling this hazard in future systems include:

1. Avoid exposure to the Hazard – Perform berthing in a different way to avoid exposure to the hazard, such as;
    a. Avoid designs that require the manipulator to remain attached to a payload while the berthing mechanism rigidizes the interface. For example, for berthing-compatible International Docking Systems (Ref. IDSS-IDD), the recommended operational sequence is for the manipulator to berth the active/passive docking interfaces together to engage the soft capture latches and then release to allow the docking system to retract to fully align and seat the interface and engage hard capture hooks. This operational sequence ensures that only one system is active at any given time
    b. Design interface to allow the manipulator to achieve full alignment/seating (passive berthing).
2. Control/Protect against the Hazard – Provide ability to stop the active mechanism before loads can build up to exceed structural load limits. Implementation options include;
    a. Provide a method for the manipulator to signal a stop to the mechanism's controller in the event of a failure, and vice-versa
    b. Design incremental control capability into the active mechanism whereby the active mechanism moves a prescribed/safe distance
    c. Design manipulator Safing response to be situation dependent. For example, during a berthing operation, do not engage the brakes in response to a failure condition
3. Reduce Consequences of the Hazard - Design system so that hardware can withstand the loads that are generated when an active mechanism keeps pulling while the manipulator is braked. Implementation approaches include;
    a. Limit forces and moments that the active mechanism can generate (e.g. Design active mechanisms with variable pulling force)
    b. Design system to provide mechanical load limiting to protect interfaces. E.g. Size mechanical brakes on the manipulator so that they will slip before robotic interface and active mechanism load limits are exceeded.

The pros and cons of the various methods are summarized in Table F-3.

TABLE F-3 METHODS FOR CONTROLING OFF-NOMINAL BERTHING LOADS

	Method	Pros	Cons
1a	Use designs which do not require manipulator to remain attached to payload during interface seating	- Adds fault tolerance (requires multiple failures before hazard effect occurs) - No analysis required for coupled active system behavior (arm/mechanism)	- Imposes requirement on robotic interface to implement a soft-capture system capable of safely restraining payload - Requires status (soft capture) handshaking to support automation.
1b	Use designs which allow manipulator to achieve full seating	- Adds fault tolerance (requires multiple failures before hazard effect occurs) - No analysis required for coupled active system behavior (arm/mechanism)	- Imposes requirement on robotic interface to implement alignment guides which enable full seating by manipulator - Requires manipulator to have force/moment accommodation - Requires status (fully mated) handshaking to support automation
2a	Provide a method for manipulator to signal a stop to the mechanism's controller in the event of a failure	- Software "only" solution (no mass)	- Requires interface-specific analysis to identify required driving speed of mechanism and maximum communication latency to limit loads. - Requires software/comm. interface between manipulator and external mechanism
2b	Design incremental control capability into active mechanism	- Software "only" solution (no mass)	- Requires interface-specific analysis to identify minimum increment to limit loads. - Increased operational timelines unless scripting/automation adopted
2c	Incorporate context-specific Safing response (i.e. do not engage brakes in response to a	- Adds fault tolerance - Extensible to other operational scenarios where load limits can be exceeded (e.g. free-flyer capture)	- Requires joint brakes to be designed to be fault tolerant against inadvertent brake application

	Method	Pros	Cons
	failure during certain operations)	- Reduces demands/requirements on users	
3a	Limit forces & moments that active mechanism can generate	- Robust – system is not capable of overloading itself.	- Requires interface-specific analysis to identify required mechanism driving torque to limit loads on the manipulator/interface - Risk of operational nuisances (mechanism stall) if on-orbit friction higher than expected.
3b	Size manipulator brakes so that interface loads are not easily exceeded in off-nominal scenarios	- Robust – system is less capable of overloading itself - Extensible to other operational scenarios where load limits can be exceeded (e.g. free-flyer capture) - Reduces demands on users	- Reducing brake friction increases the stopping distance of the manipulator in emergency scenarios. Requires slower maneuvering speeds. - Reduces the "holding" force of the manipulator for applications where the arm is expected to passively hold position while being pushed on by an external force.

F.2.4 CONCLUSIONS & RECOMMENDATIONS

The merit of each of the options were evaluated against the following criteria (in order of priority):

- Hazard Avoidance – Whether hazard is avoided
  - Hazard avoidance/elimination is preferred over mitigation methods
- Extensible – Applicability of method other operational scenarios (i.e. can also help to reduce loads in scenarios other than berthing)
  - Extensibility is preferred
- Level of Analysis - Need for mission specific integrated analysis
  - Lower analysis is preferred to reduce Phase E effort
- External Impacts - Burden (verification) imposed on external systems
  - No impact to external systems is preferred
- Operational Impact – Impact to timeline or operations complexity

- Minimal complexity is preferred but less critical with automation

- Manipulator Impacts – Burden/complexity imposed on manipulator
  - Lower impact is preferred to reduce development complexity

Based on the evaluation criteria the recommended order of preference for addressing the hazard associated with berthing to an externally controlled mechanism are;

1. Adopt designs which do not require manipulator to remain attached to payload during interface full seating (method 1.a)
2. Adopt designs which enable the manipulator to achieve full seat (method 1.b)
3. Size manipulator brakes so that interface loads are not easily exceeded in off-nominal scenarios (method 3.b)
4. Incorporate context-specific Safing response (i.e. do not engage brakes in response to a failure during certain operations) (method 2.c)
5. Incorporate method for manipulator to halt the active mechanism (method 2.a)
6. Design incremental control capability into active mechanism (method 2.b)
7. Limit forces & moments that active mechanism can generate (method 3.a)

No IERIS updates are identified at this time since, no externally controlled berthing mechanisms are currently included in IERIS, and the IDSS already captures the preference identified by this trade (i.e. for berthing-compatible implementations, do not require manipulator to remain attached to payload during interface full seating)

F.3 ORU STYLE: PLATFORM VS. DIRECT HANDLING

F.3.1 PURPOSE

The purpose of this trade was to compare different approaches to incorporating robotically compatible interfaces into an ORU.

F.3.2 BACKGROUND

Historically ORUs have been designed in two fashions;

1. Direct Handling – Where ORU features (soft-docks, tie-downs, mate/demate mechanisms, targets, alignment guides) are directly incorporated into equipment. A historical example from ISS is shown in Figure F-3.

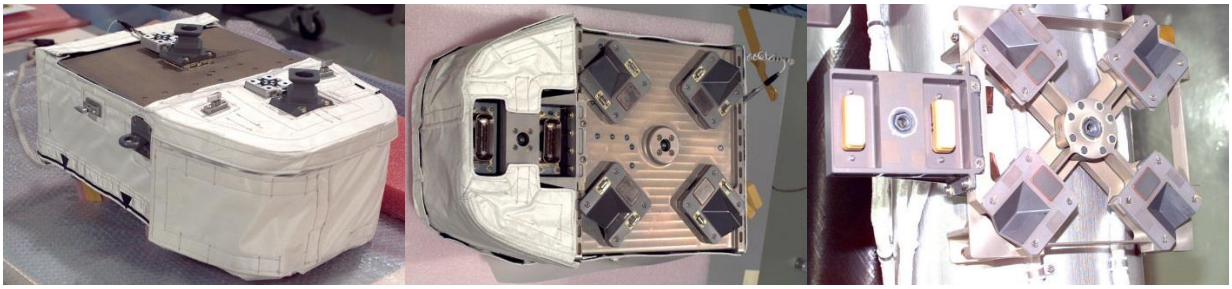

FIGURE F-3 EXAMPLE OF DIRECT GRASP STYLE ORU

2. Platform Style – Where ORU features are incorporated into a generic platform, onto which equipment can be mounted via standardized bolt patterns and connectors. A historical example from ISS is shown in Figure F-4.

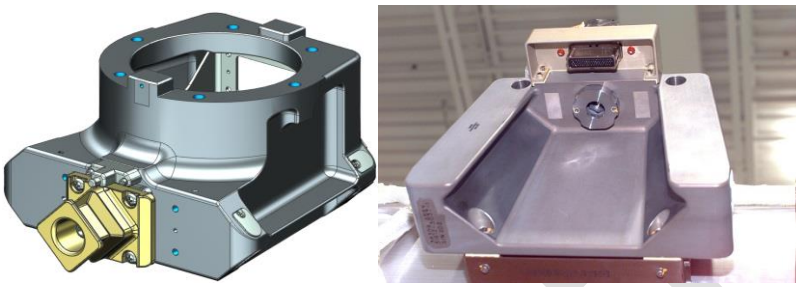

FIGURE F-4 EXAMPLE OF PLATFORM STYLE ORU INTERFACE

F.3.3 TRADE

The factors considered when evaluating the two ORU styles included;

1. Commonality
2. Complexity
3. Verification
4. Thermal Considerations
5. Accessibility
6. Mass “Tax” for ORU Interface

A comparison of platform-based and direct handling style ORUs is summarized in Table F-4.

TABLE F-4 COMPARISON OF PLATFORM-BASED AND DIRECT HANDLING STYLE ORUS

	Criteria	Platform-Based	Direct Handling
1	Commonality	- Enable a standardized mating interface which can be used in a family of ORUs - Supports a common set of robotic operations for using the family of ORUs, which can increase the reliability of operations (i.e. lessons learned from one ORU is applicable to other ORUs)	- Can be more challenging to standardize due to different ORU form factors and constraints. (E.g. a tie-down bolt through the centre of the box may be too onerous to accommodate on some designs) - Tend to be optimized/tailored to the size/shape of the equipment which leads to more ORU-specific robotic operations/procedures
2	Complexity	- Equipment developers have less external interfaces and requirements to design to	- In instances where tie-down bolts penetrate through the box, low level designers (e.g. circuit card assembly placement) need to work around the ORU features. - Equipment is directly in the load path during robotic operations and therefore must be designed to withstand nominal and off-nominal robotic loading events
3	Verification & Validation	- In instances where tie-down bolts penetrate through the box, low level designers (e.g. circuit card assembly placement) need to work around the ORU features. - Equipment is directly in the load path during robotic operations and therefore must be designed to withstand nominal and off-nominal robotic loading events	- Each ORU design iteration likely requires its own V&V - ORU developer is responsible for verifying EVA/EVR maintainability requirements

	Criteria	Platform-Based	Direct Handling
4	Thermal Considerations	- Tend to thermally isolate the user from the station mounting interface	- Can better support heat transfer between the ORU and the mounting interface
5	Accessibility	- When large volume ORUs are mounted on platforms, robotic access to handling features can be restricted	- Robotic access to ORU handling interfaces can be optimized and less restrictive
6	Mass “Tax” for ORU Interface	- If platform is designed to accommodate a range of equipment shapes/sizes then it will be overdesigned for smaller ORUs and therefore not mass-optimized - Scalable designs would enable mass-optimization - Support the use of common on-orbit logistics support equipment (e.g. temp stow locations)	- Since ORU design features can be tailored to the equipment, more mass optimization may be possible - Unique mounting interfaces may require dedicated logistics support equipment (carriers and temp stowage locations) to support end-to-end maintenance concepts

F.3.4 CONCLUSIONS & RECOMMENDATIONS

The trade found that there are merits with both styles of ORU interfaces as follows;

- Platform style ORU designs are easier to support commonality which can reduce non-recurring engineering costs in design and verification, as well as the recurring costs to conduct the on-orbit operations on the ORUs.
- Direct ORU grasp style ORU designs may be necessary for some applications where thermal conduction across the mating interface is required