NASA HEADQUARTERS
SCIENCE MISSION DIRECTORATE (SMD)

MANAGEMENT HANDBOOK

Approved by: **ORIGINAL SIGNED BY S. ALAN STERN** **(Date):** **8 FEB 2008**

ASSOCIATE ADMINISTRATOR FOR THE SCIENCE MISSION DIRECTORATE

THIS PAGE INTENTIONALLY LEFT BLANK

DOCUMENT HISTORY LOG

Status (Baseline/Revision/Canceled)	Document Version	Effective Date	Description
Baseline	V1	08-Feb-2008	SMD AA-approved release

THIS PAGE INTENTIONALLY LEFT BLANK

TABLE OF CONTENTS

SECTION NO. **PAGE NO.**

1.0 **Introduction** **1**
2.0 **SMD Organization** **3**
2.1 Overview 3
2.2 Office of the Associate Administrator for SMD 3
2.2.1 Associate Administrator 4
2.2.2 Deputy Associate Administrator 5
2.2.3 Deputy Associate Administrator for Programs 5
2.2.4 Assistant Associate Administrator for Strategy, Policy, and International 5
2.2.5 Chief Scientist 6
2.2.5.1 Chief Scientist 6
2.2.5.2 Deputy Chief Scientist for Space Science 6
2.2.5.3 Deputy Chief Scientist for Earth Science 6
2.2.6 Senior Adviser for Research and Analysis 6
2.2.7 Special Assistant for Near Earth Objects and Exploration 7
2.2.8 Senior Adviser for Science Process and Ethics 7
2.2.9 Chief of Staff 8
2.3 Divisions 8
2.3.1 Science Divisions 8
2.3.1.1 General Science Area-Specific Responsibilities 8
2.3.1.2 Cross-Divisional Responsibilities 9
2.3.2 Management and Policy Division 9
2.3.2.1 Policy and Administration 9
2.3.2.2 Budget 11
2.4 SMD Management Councils 11
2.5 Embedded Mission Support Staff 15
2.5.1 Office of Legislative and Intergovernmental Affairs 15
2.5.2 Office of Public Affairs 15
2.5.3 Office of the General Counsel 15
2.5.4 Office of the Chief Engineer 15
2.6 Other Functional Offices 16
2.6.1 Office of External Relations 16
2.6.2 Office of Procurement 16
2.6.3 Office of Safety and Mission Assurance 16
2.7 Science Support Office 17
3.0 **Strategic Planning** **19**
3.1 Overview 19
3.2 Responsibility 19
3.3 Development Process 19
3.4 Schedule 21
4.0 **Research Program Management** **23**
4.1 Overview 23
4.2 Research and Analysis Program Management 23

TABLE OF CONTENTS

SECTION NO. **PAGE NO.**

4.2.1 Organization of R&A Programs ... 23
4.2.2 R&A Program Management Roles and Responsibilities ... 24
4.2.3 R&A Program Management Activities ... 26
4.2.4 Managing the Proposal Cycle ... 27
4.2.4.1 Soliciting Proposals through NRAs including ROSES ... 27
4.2.4.2 Receiving, Evaluating, and Selecting Proposals ... 31
4.2.4.3 Awarding Selected Proposals ... 33
4.2.5 R&A Oversight ... 34
4.2.5.1 Review of R&A Investigations ... 34
4.2.5.2 Review of R&A Program Elements ... 35
4.2.5.3 Review of R&A Discipline Areas ... 35
4.2.5.4 Review of R&A Programs ... 36
4.2.5.5 Performing Risk Management ... 36
4.2.5.6 Closing or Transferring Research Activities ... 36
4.2.6 Support Systems ... 37
4.2.6.1 NSPIRES ... 37
4.2.6.2 Grants.gov ... 38
4.2.6.3 RAPTOR ... 38
4.2.7 Additional Topics ... 39
4.2.7.1 Working Groups and Science Definition Teams ... 39
4.2.7.2 Graduate Student and Postdoctoral Fellowship Programs ... 40
4.2.7.3 Unsolicited Proposals ... 41
4.2.7.4 Solicited but Noncompeted Proposals ... 41
4.2.7.5 SMD Data Policy ... 41
4.3 Management of other (non-R&A) Research Programs ... 42
5.0 Flight Program Management and Assessment ... 43
5.1 Overview ... 43
5.2 Program/Project Management Roles and Responsibilities ... 45
5.2.1 Program Manager ... 53
5.2.2 Program Executive ... 54
5.2.3 Program Scientist ... 56
5.2.4 Program Analyst ... 58
5.3 Pre-Formulation (Pre-Phase A) ... 59
5.3.1 Advanced Concepts for Strategic Missions ... 59
5.3.2 Pre-Formulation Concept Definition ... 60
5.3.3 Technology Incorporation ... 61
5.3.4 Initiation of New Programs ... 61
5.3.5 Transition to Formulation ... 62
5.3.5.1 Formulation Authorization Document ... 62
5.3.5.2 Program Delegation Letter ... 62
5.3.5.3 Project Authorization Letter ... 62

TABLE OF CONTENTS

SECTION NO. **PAGE NO.**

5.3.6 Flight Project Solicitations ... 63
5.3.6.1 Developing the AO ... 63
5.3.6.2 AO Evaluation, Selection, and Award ... 64
5.4 Formulation Subprocess (Phases A and B) ... 66
5.4.1 Phase A Mission Requirements Definition ... 66
5.4.1.1 Mission Studies ... 66
5.4.1.2 External Agreements ... 67
5.4.1.3 Initiation of Program Commitment Documentation ... 68
5.4.1.4 Mission Definition Review ... 69
5.4.2 Phase A to B Transition ... 69
5.4.2.1 Transition Process for Strategic Projects ... 69
5.4.2.2 Transition Process for AO-initiated Projects ... 71
5.4.2.3 Cost Analysis Data Requirement (CADRe) ... 71
5.4.2.4 Transition Point for New Technology ... 71
5.4.2.5 Programmatic Requirements for Phase A to B Transition ... 72
5.4.3 Phase B Preliminary Design ... 73
5.4.3.1 Project Reviews ... 74
5.4.3.2 NASA HQ Policy Decisions/Actions during Phase B ... 74
5.4.3.3 Preparation for Approval (NAR/KDP-C) ... 75
5.4.4 Program Commitment Documentation ... 76
5.4.4.1 Program Commitment Agreement ... 76
5.4.4.2 Program Plan ... 77
5.4.4.3 Stewardship of Level-1 Requirements ... 78
5.4.4.4 Program-Level Requirements Appendix ... 78
5.4.4.5 Updates to Program Plan and Appendices ... 79
5.4.5 Formulation Checklist ... 79
5.5 Approval Subprocess (Phase B to C Transition) ... 81
5.5.1 Project Approval ... 82
5.5.2 Program Approval ... 84
5.6 Implementation Subprocess (Phases C, D, and E) ... 85
5.6.1 HQ Tasks During Phases C & D ... 86
5.6.2 Launch Preparation and Support ... 86
5.6.3 Transition to Science Operations (Phase D to E) ... 88
5.7 Evaluation Subprocess ... 90
5.7.1 Program Executive Responsibilities for Evaluation ... 91
5.7.2 Independent Evaluation Reviews ... 91
5.7.2.1 Preliminary Non-Advocate Review and Non-Advocate Review 91
5.7.2.2 Program Implementation Review (PIR) ... 92
5.7.2.3 Special Topic Assessments ... 92
5.7.2.4 Systems Management Office ... 93
5.8 Management Activities through All Phases ... 93
5.8.1 Program/Project Assessment and Reporting ... 93

TABLE OF CONTENTS

SECTION NO. **PAGE NO.**

5.8.1.1 Weekly Reporting 93
5.8.1.2 Monthly Reviews 94
5.8.1.3 Milestone Database 94
5.8.1.4 Science Pending International Agreements Database 95
5.8.1.5 Requirements Management System 95
5.8.1.6 Quarterly Status Reports to the Agency PMC 95
5.8.1.7 Government Performance and Results Act Metrics 95
5.8.2 Budget Control, Descope, and Cancellation 95
5.8.2.1 Cost Baseline Establishment and Control 96
5.8.2.2 Descope or Cancellation as Controls 97
5.8.3 Ground Systems Management 98
5.8.4 Risk Management 98
5.8.4.1 Risk Management Concept 99
5.8.4.2 Responsibilities for Risk Management 99
5.8.4.3 Documenting and Communicating Risk 100
5.9 Program/Project Waivers 100
5.10 Mission Extension or Termination 101
5.10.1 Senior Review 101
5.10.2 Major On-orbit Anomaly 102
5.10.3 The Termination Process 103
6.0 Technology Program Management 105
6.1 Overview 105
6.2 Focused Technology Development 105
6.3 Cross-divisional Technology Development 106
6.4 Flight Validation 106
7.0 Partnerships 107
7.1 Overview 107
7.2 Relevant NASA Guidance 108
7.3 International Agreements 108
7.3.1 Office of External Relations 108
7.3.2 Export Control 109
7.3.3 Types of International Agreements 109
7.3.4 International Agreement Development Process 110
7.4 Interagency Agreements 110
7.4.1 Types of Interagency Agreements 111
7.4.2 Interagency Agreement Development Process 111
7.4.3 Interagency Partnerships Led by the Executive Office of the President 111
7.4.3.1 Office of Management and Budget 112
7.4.3.2 Office of Science and Technology Policy 112
7.4.3.3 National Science and Technology Council 112
7.4.3.4 Earth Science and Applications Forums 112

TABLE OF CONTENTS

SECTION NO. **PAGE NO.**

7.5 Intra-Agency Agreements ... 113
7.5.1 Types of Intra-Agency Agreements ... 113
7.5.2 Intra-Agency Agreement Development Process ... 113
7.6 Agreements with Other External Organizations ... 114
7.6.1 Types of Space Act Agreements with External Organizations ... 114
7.6.2 External Organization Space Act Agreement Development Process ... 115
7.7 Delegation of Authority for Space Act Agreements ... 115
7.8 Training for Partnerships ... 115
7.9 Agreement Archiving and Routing ... 115

8.0 Budget and Performance Measurement ... 117
8.1 Overview ... 117
8.2 Budget Process ... 117
8.2.1 SMD Internal Budget Process ... 119
8.2.2 Developing the Annual Operating Plan ... 120
8.3 Performance Planning Process ... 120
8.3.1 Organizational Roles and Responsibilities ... 121
8.3.2 The SMD Internal Performance Planning Process ... 121
8.3.3 The SMD Performance Assessment Process ... 122

9.0 Management Tools and Information Systems ... 125
9.1 Overview ... 125
9.2 ScienceWorks Web Portal ... 125
9.2.1 Core Modules ... 125
9.2.2 Financial Modules ... 126
9.2.3 Decision Support Modules ... 126
9.3 Core Financial Systems ... 127
9.3.1 The E-Budget Toolset ... 127
9.3.2 Related Institutional Financial Systems ... 128
9.4 NASA Institutional Systems ... 128

10.0 Education and Public Outreach ... 129
10.1 Introduction ... 129
10.2 NASA Education and Public Outreach ... 129
10.3 SMD Education and Outreach ... 131

11.0 Administrative and Policy Processes ... 133
11.1 Overview 133
11.2 Headquarters Operations and Institutional Activities ... 133
11.2.1 Institutional Budget ... 133
11.2.2 Travel ... 134
11.2.3 Information Technology Support ... 134
11.2.4 Conference Support ... 134
11.2.5 Telework ... 134
11.2.6 Office Space ... 134
11.2.7 Health and Safety ... 135

TABLE OF CONTENTS

SECTION NO. **PAGE NO.**

11.2.8 NPD/NPR Coordination 135
11.2.9 Inspector General, General Accounting Office, and NASA HQ Management System Audits 135
11.2.10 Correspondence Control 136
11.2.10.1 Headquarters Action Tracking System (HATS) 136
11.2.10.2 FOIA Requests 137
11.2.11 SMD Website 138
11.2.12 Launch Guest Operations 138
11.3 Human Capital 138
11.3.1 Recruitment and Personnel Actions 139
11.3.2 Performance and Incentive Awards 139
11.3.3 Performance Appraisals 139
11.3.4 Leadership Development and Training 140
11.3.5 SES Positions 140
11.3.6 IPA Appointments and Detailees 141
11.4 Policy Processes 141
11.4.1 Congressional Activities 141
11.4.2 External Communications 142
11.4.3 Advisory Committee Management 142
Appendices A-1
Appendix A. Policy and Procedure Resources A-2
A.1 Research Management A-2
A.1.1 SMD Policy Documents A-2
A.1.2 Additional Resources A-2
A.1.3 Referenced Material A-3
Appendix B. SMD Charters A-4
B.1 Directorate Program Management Council A-4
B.2 Science Management Council (SMaC) of the Science Mission Directorate A-21
Appendix C. Sample Documentation A-23
C.1. Sample Formulation Authorization Document A-23
C.2. Sample Program Delegation Letter A-28
C.3. Sample Project Authorization Letter A-29
C.4. Sample Program-level Requirements Appendix A-30
Appendix D. Technology Readiness Levels A-35
Appendix E. SMD Management Handbook Web Site References A-36
Appendix F. Glossary Of Acronyms A-39

LIST OF FIGURES

FIGURE NO. **PAGE NO.**

Figure 2-1. SMD Organization 3
Figure 4-1. Organization of SMD Division R&A Programs 24
Figure 5-1. SMD Flight Program Management Process 44
Figure 5-2. HQ's Management Team for a Given Project 45
Figure 5-3. SMD Management Accountability 52
Figure 5-4. SMD Initial Confirmation Process for KDP-B 70
Figure 5-5. Approval Process for SMD Programs and Projects 81
Figure 5-6. Launch Preparation Documentation Process 87
Figure 5-7. Risk Management Process 99
Figure 8-1. PPBE Phases and Steps 118
Figure 10-1. Outcomes Mapped to the Education Strategic Framework 129
Figure 10-2. Education Portfolio Coordination Framework 130
Figure D-1. Technology Readiness Levels A-35

LIST OF TABLES

TABLE NO. **PAGE NO.**

Table 2-1. Definitions of SMD Councils and Related Processes 13
Table 2-2. Decision Responsibilities for Projects in Cross- and Single-Discipline Programs 14
Table 3-1. SMD Strategic Planning Development Process 19
Table 4-1. SMD Research Management Roles and Responsibilities 25
Table 4-2. SMD Research Management Key Decision Points and Required Reviews 26
Table 5-1. Roles and Responsibilities Relationships Matrix 47
Table 5-2. Formulation Checklist for KDP-C 80

THIS PAGE INTENTIONALLY LEFT BLANK

1.0 INTRODUCTION

NASA's Science Mission Directorate (SMD) manages a broad portfolio of challenging scientific projects and research valued at more than $5 billion per year. This portfolio includes more than 90 space missions in various stages of development or operation; a variety of sounding rocket, balloon, and aircraft projects; information systems handling terabytes of scientific data; some 4000 research grants; and more than 100 international and interagency partnerships. Effective management of this complex portfolio of leading-edge scientific and engineering endeavors requires effective process definition and clearly assigned responsibilities. NASA Policy Directives define and bound many of these processes at the Agency level; SMD must define its implementing processes. Other processes and responsibilities are specific to SMD.

The SMD Associate Administrator's five objectives for SMD in the near term are to:

- Get more science done with our budget (e.g., through rigorous project cost control).
- Help ensure President George W. Bush's Vision for Space Exploration succeeds.
- Promote US leadership across all of SMD's science disciplines.
- Create a great workplace
- Improve SMD's perceived and actual impact on and relevance to the Public.

Following the processes described in this SMD Management Handbook will help SMD achieve these objectives.

This SMD Management Handbook serves as a guide to SMD team members and Agency partners on how SMD implements NASA's and SMD's policies and processes. While the *NASA Science Plan* articulates the "what and why" of our programs and projects, this Management Handbook describes the "how" for those who are planning and overseeing these programs and projects from NASA Headquarters.

Chapter 2 describes the SMD organization, providing a top-level view of how responsibilities are allocated. Chapter 3 on strategic planning describes how we work with the science community to establish scientific priorities and how SMD uses those to define programs and projects. Chapters 4 and 5 are the core of the Handbook, describing processes and responsibilities for research management and flight program management and assessment. Chapter 6 does the same for technology program management. Chapter 7 defines how SMD manages its many partnerships through formal agreements, largely with the assistance the Office of External Relations. Chapter 8 defines processes for budget management and performance measurement. Chapter 9 describes SMD's management tools and information systems. Chapter 10 describes SMD's approach to education and public outreach, including the interface to the NASA Office of Education. Finally, Chapter 11 addresses administrative processes, including human capital and Headquarters operations and institutional activities.

THIS PAGE INTENTIONALLY LEFT BLANK

2.0 SMD ORGANIZATION

2.1 OVERVIEW

The Associate Administrator (AA) for the Science Missions Directorate (SMD), with the support of an executive management team, directs SMD. Four Mission Divisions aligned along science themes manage the Directorate's program work, and the Management and Policy Division (MPD) provides budget, policy, and administrative support. In addition, a number of Headquarters (HQ) Mission Support Offices provide support to SMD with some staff collocated (or "embedded") in the SMD office suite. **Figure 2-1** represents SMD's organization as of October 1, 2007.

2.2 OFFICE OF THE ASSOCIATE ADMINISTRATOR FOR SMD

The Office of the SMD AA provides executive leadership, overall planning, direction and effective accomplishment of NASA programs concerned with the scientific exploration of the Earth, Moon, Mars, and beyond, including charting the best route of discovery and reaping the benefits of Earth and space exploration for society. The SMD executive management team includes a Deputy Associate Administrator (DAA), a DAA for Programs (DAA/P), and a supporting team of executive staff and embedded support staff.

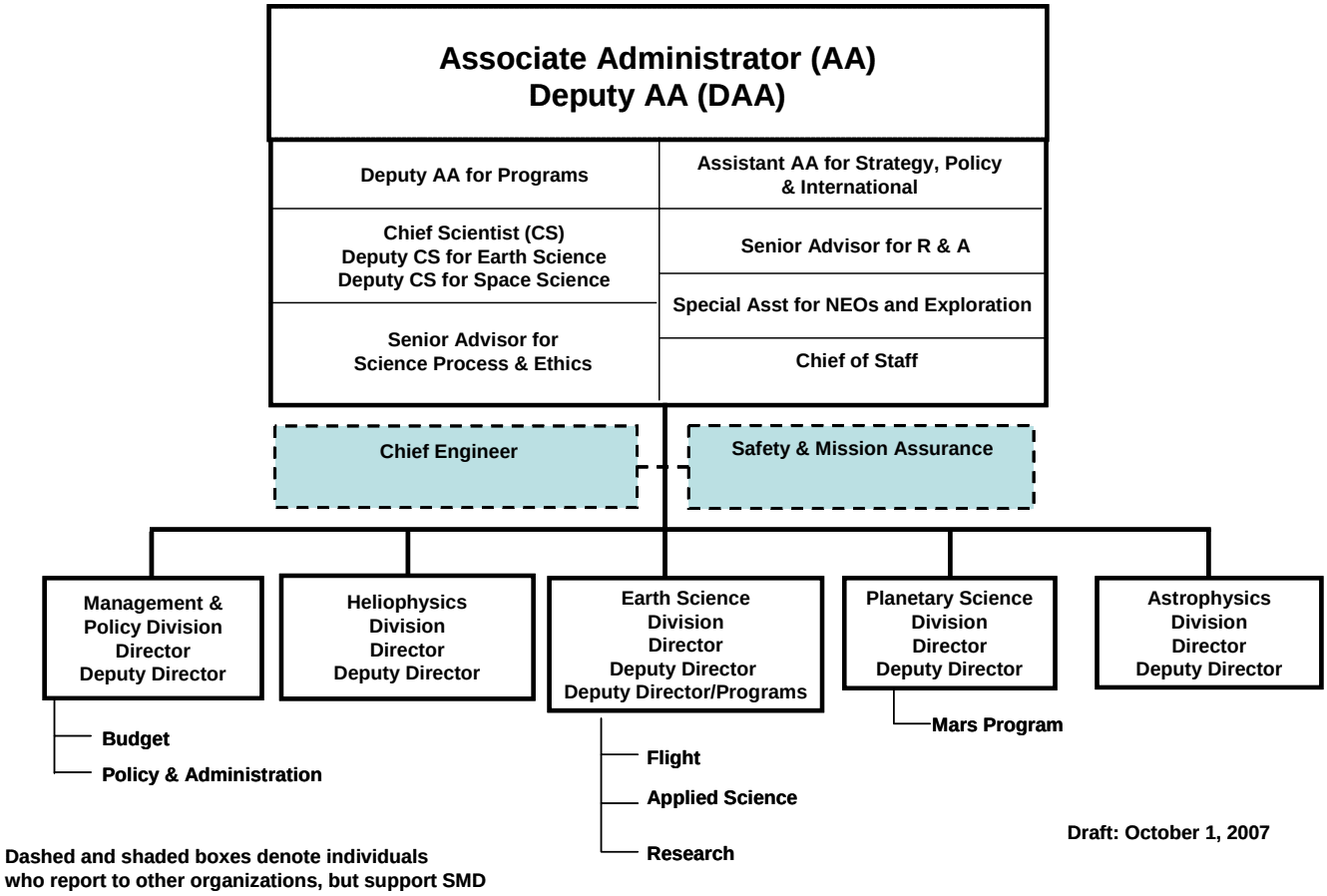

Figure 2-1. SMD Organization

2.2.1 Associate Administrator

In accordance with NASA Policy Directive (NPD) 1000.3, *NASA Organization*, the SMD AA is responsible for:

- Engaging the external and internal science community through the National Research Council (NRC) and science advisory groups to define and prioritize science questions that NASA should pursue in light of its Vision for Space Exploration (VSE) and mission.
- Providing scientific results and priorities to enable and help guide NASA's VSE and exploit VSE capabilities for scientific discovery where appropriate.
- Developing a Mission Directorate Implementation Plan designed to execute the strategic goals/objectives outlined in the *NASA Strategic Plan*.
- Overseeing the formulation and definition of programmatic requirements, objectives, and performance goals.
- Sponsoring research by academia, NASA Centers, other Federal research centers, industry, and others selected through open, competitive solicitations.
- Developing and/or leveraging advanced technologies to meet science mission requirements and enables new scientific endeavors.
- Managing the development of the SMD budget to support programmatic requirements and objectives and allocates resources in support of programs and projects.
- Conducting regular reviews of program and project performance, evaluating the current and projected status against the established requirements, objectives, and performance goals.
- Overseeing SMD reporting as required by Congress, the Office of Management and Budget (OMB), and other external bodies.
- Coordinating SMD's planning, policies, and programs with other NASA Mission Directorates, Government agencies, industry, international participants, and academia.
- Coordinating all international partnership arrangements with the Office of External Relations (OER).
- Extending the benefits of NASA science, technology, and information to the Nation through partnerships with other Federal agencies and other organizations relied upon by decision makers and citizens.
- Representing NASA and SMD in promoting and maintaining good public and community relations and providing for the widest practical and appropriate dissemination of information concerning space activities.
- Ensuring that data and information from NASA science missions are openly available and accessible in a timely and affordable manner.
- Conducting educational and public outreach programs to enhance the Nation's return on its investment in NASA.
- Providing overall institutional management, policy programmatic oversight, and performance evaluation for SMD.

2.2.2 Deputy Associate Administrator

The DAA works under the general direction of the SMD AA and shares the full range of responsibilities with special emphasis on general management, day-to-day program evaluation and direction, general oversight of SMD program management, including interfacing with senior NASA management on program operating issues and problems, interface activities with industry, and supporting the AA with presenting SMD's program and budget to the Congress and other external entities.

2.2.3 Deputy Associate Administrator for Programs

The DAA for Programs (DAA/P) is responsible for:

- Overseeing the safe and successful operations of the current fleet of the SMD operating spacecraft.
- Overseeing the safe and successful execution of the SMD missions in formulation and development.
- Chairing the Directorate Program Management Council (DPMC), responsible for the in-depth assessment of programs and projects for the purpose of certifying their programmatic, management and technical readiness to proceed into the phases of formulation and/or implementation.
- Chairing monthly SMD flight program reviews to ensure integration of performance and budget for SMD missions and providing oversight for appropriate cost, schedule and timely technical trades.
- Ensuring that sound management and engineering practices are followed for program and project safety and success, and the fulfillment of commitments.
- Providing guidance for improved program/project management practices, and for organizational training and development initiatives.

2.2.4 Assistant Associate Administrator for Strategy, Policy, and International

The Assistant Associate Administrator for Strategy, Policy, and International (AAA/SPI) coordinates and represents integrated Directorate plans and policies within NASA and to key external groups. This includes interacting with the research community via SMD's relationship with the NRC, as well as developing and requesting new studies needed by SMD, and overseeing the management of the NRC Activity Tracking System (NATS) an online database of key documentation for past and current studies. See SMD Science Policy Directive (SPD), SPD-03A, for study initiation and follow-up processes (see Appendix A.1.1, "SMD Policy Documents.") The AAA/SPI plans and supports meetings with SMD's foreign partner agencies and meets with their officials as required; he also oversees management of the Science Pending International Agreement Database, which tracks the status of new international agreements, and reviews and concurs on international Space Act Agreements. He works with the Office of Legislative and Intergovernmental Affairs (OLIA) in coordinating SMD information about upcoming decisions and events that may be of interest to Congress. The AAA/SPI also represents SMD as required to other Mission Directorates and to the Office of Strategic Communications.

2.2.5 Chief Scientist

2.2.5.1 Chief Scientist

The Chief Scientist (CS) reports directly to the AA. As delegated by the AA, the CS represents SMD in scientific and technical venues, except for personnel supervision and personnel management. In addition, the CS serves as assistant and senior science advisor to the AA on all matters of the SMD science program as follows:

- Serve as liaison between the AA's office and the Earth and space science research community by maintaining an active relationship within the scientific and technical communities at large, specifically academic, industrial, and government organizations involved with the development and use of scientific instrumentation, the analysis and interpretation of data, and the planning of future programs in all of the SMD scientific disciplines.
- Chair the SMD Science Management Council (SMaC) to ensure the quality of science processes and programs, and with the AA makes final decisions on matters of Directorate policy.
- Participate in the DPMC to ensure the quality, integrity and readiness of the science portions of SMD space missions, and recommend to the AA on whether or not a mission is ready to move to its next phase or not, and SMD mission termination/descoping.
- Support the AA in presenting the SMD science program to NASA top management, OMB, other Federal agencies, and Congress by analyzing and integrating scientific and technical aspects of the Directorates programs.
- Serves as the SMD senior science representative to the National Science and Technology Council, the Office of Science and Technology Policy (OSTP) committees, and external agencies as required.

Two Deputy Chief Scientists (DCSs) support the CS.

2.2.5.2 Deputy Chief Scientist for Space Science

The DCS for Space Science (DCS/SS) supports and represents the CS in the area of space science, including astrophysics, heliophysics, and planetary science.

2.2.5.3 Deputy Chief Scientist for Earth Science

The DCS for Earth Science (DCS/ES) supports and represents the CS in the area of Earth science and applications.

2.2.6 Senior Adviser for Research and Analysis

The Senior Adviser for Research and Analysis (SARA) reports directly to the SMD AA working as a senior level liaison to improve the general efficiency, productivity, and quality of science programs and missions within the Directorate. The incumbent:

- Recommends allocations of and data analysis research requirements of selected programs to the AA/SMD. SARA ensures preparation of supporting plans and recommends to the AA for allocation of full cost resources including personnel.

- Recommends process improvements as well as new content and content balance recommendations to the AA regarding the Directorate's Research and Analysis (R&A) and Data Analysis programs.
- Maintains cognizance of Directorate's R&A and Data Analysis programs including performance content and resources. SARA assesses technical and program risks and benefits of collaborative interagency program opportunities, and provides those assessments to the SMD AA.
- Organizes and oversees periodic independent evaluations of the scientific content of SMD's research programs and mission data analysis programs.
- Provides expert recommendations on scientific performance metrics for the Directorate's R&A and Data Analysis programs to evaluate progress in achieving the Directorate *NASA Science Plan* goals and objectives.
- Maintains cognizance of all Directorate programs and missions including performance content and resources. SARA assesses technical and program risks and benefit of collaborative interagency program opportunities, and provides those assessments to the AA.
- Performs programs formulation guidance and makes collaborative program recommendations to the AA. SARA prepares program commitment agreements.
- Support the AA in presenting the SMD science program to NASA top management, OMB, other Federal agencies, and Congress by analyzing and integrating scientific and technical aspects of the Directorate program.

2.2.7 Special Assistant for Near Earth Objects and Exploration

The Special Assistant for Near Earth Objects (NEOs) and Exploration (SANEOE)'s primary duties include:

- Liaison with the Exploration Systems Mission Directorate (ESMD) to ensure that design and development of the exploration architecture and systems for robotic and human exploration of the Moon incorporate opportunities for science.
- Coordination with commercial entities working to development manned suborbital spaceflight capabilities to identify opportunities to conduct scientific investigations.
- Providing advice and assistance on issues associated with NEO science and exploration.

2.2.8 Senior Adviser for Science Process and Ethics

The Senior Adviser for Science Process and Ethics (SASPE) reports directly to the AA. The SASPE serves as the responsible senior official for science-related standards for SMD, including the maintenance and appropriate modification of all U.S. Government-required formal documents, including NPDs and NASA Procedural Requirements. The incumbent works with the CS, Division Directors and other senior-level SMD staff to establish and update science guidelines at all levels, from NASA Research Announcement (NRA) R&A, investigations to flight missions. The incumbent further supports the AA/SMD to ensure proper conduct of all formal categorization reviews, The incumbent also serves as a "science ethics" focal point for the Directorate, ensuring fair and open competition, the integrity of all evaluations, and avoidance of conflicts, as well as improvement of the efficiency and effectiveness of Announcements of Opportunity (AO)- and NRA- based competitions. In addition, the incumbent is responsible for updates to the NPR 7120.8, *Research and Technology Program*

and Project Management Requirements that support the management of science and science missions within the Agency. The incumbent and the CS conduct AO Steering Committee meetings and work together to ensure the integrity of all evaluations.

2.2.9 Chief of Staff

The Chief of Staff (COS) is a senior advisor to the AA and DAA and has responsibility for a wide range of sensitive assignments, special inquiries, and short-term projects. The COS identifies operating problems, conflicting priorities, and potential problems within SMD and recommends solutions. COS resolves scheduling conflicts for the AA and DAA and ensures that both are prepared for major international, interagency, and public events. The COS is also the process lead within the SMD front office for floor plans; coordination with ESMD, formal action items, especially those tracked through the HQ Action Tracking System (HATS); interface with the OMB; and ScienceWorks. COS also represents the AA and DAA at meetings and conferences.

2.3 DIVISIONS

2.3.1 Science Divisions

2.3.1.1 General Science Area-Specific Responsibilities

As detailed in the *NASA Science Plan*, SMD organizes its work into four broad scientific pursuits, each managed by a Division implementing the four science sub-goals in the NASA Strategic Plan. These Divisions are the Astrophysics Division (APD), the Earth Science Division (ESD), the Heliophysics Division (HPD), and the Planetary Science Division (PSD). Each Division is responsible for staff functions, policy development, strategic planning and coordination for their associated science pursuits, to include:

- Planning, coordinating, and evaluating the full range of Division programs and activities concerned with research, flight and ground system development and operations, applications, education and outreach.
- Planning, directing and evaluating the activities for the Division's strategic planning, policy, resources, human resources, and management.
- Developing and implementing policy for the Division's activities and programs.
- Developing and presenting to the AA and external entities (e.g., Congress, OMB, OSTP, and other Federal Agencies) detailed plans, including, schedules and resource requirements for accomplishment of the Division's goals.
- Allocating and reprogramming resources to meet approved objectives in accordance with delegated authority.
- Participating with other SMD officials for SMD planning, policy, development and program integration.
- Acting as a liaison with the scientific community through advisory committees and other entities such as the National Academy of Sciences, and coordinating the requirements of studies with the international community and other Federal agencies.
- Assessing Centers' performance on the Division's programs through oversight of engineering development and certification of flight hardware, on-orbit engineering certification of spacecraft systems, and development of ground systems to acquire scientific

data. This includes evaluating and reporting to higher management on the performance of subordinate elements, Centers, and other supporting institutions.

- Maintaining relationships with universities, the scientific community, industry and other government agencies with respect to the Division.
- Recommending actions required for transition to other practical applications of results from research, development and data programs.
- Supporting the implementation of critical safety, management, and performance plans including the NASA Safety Initiative, NPD 7120.4, *Program/Project Management*; NPR 7120.5, *NASA Program and Project Management Processes and Requirements*; NPD 1000.0, *NASA Strategic Management and Governance Handbook*, and the NASA HQ Management System.

2.3.1.2 Cross-Divisional Responsibilities

In addition to managing the flight and research programs in their respective science areas, several of the science divisions also manage activities that support one or more of the other science divisions.

APD manages the scientific Balloon research program for all of SMD. HPD manages two cross-divisional programs, the New Millennium program (NMP) and the Explorer Program. HPD also manages the Sounding Rockets scientific research activity.

NMP develops breakthrough technologies that require space flight validation in order to retire risk of first use and provide significant benefits for future space science missions. SMD uses NMP as a primary path to flight-validate key emerging technologies to enable exciting 21st century science missions.

The Explorer Program sponsors frequent, high quality space science investigations using efficient and innovative management processes. The program's prime objective is to enhance our knowledge of space physics and astronomy by providing frequent flight opportunities for missions of interest to HPD and APD.

HPD is also responsible for SMD's information technology (IT) staff and functions. Responsibilities include coordination with the Agency Chief Information Officer, SMD IT operations, and enterprise architecture.

2.3.2 Management and Policy Division

MPD has two responsibilities. First, it is responsible for SMD budget development and execution functions, strategic planning, international coordination, legislative support, and outreach material development and activities. Second, MPD is responsible for a broad array of personnel and related administrative functions. These responsibilities are distributed between MPD's Policy and Administration Branch and its Budget Branch.

2.3.2.1 Policy and Administration

MPD's Policy and Administrative Branch addresses SMD policy and administrative functions. The Policy and Administrative Branch's Policy Group is responsible for SMD policy functions. The Policy and Administrative Branch's Administrative Group is responsible for SMD administrative functions.

In support of SMD policy functions, the Policy Group manages SMD's relations with external groups, including Congress, educational entities, and external advisory committees and boards. In partnership with the other SMD Divisions and the AAA/SP&I, the Policy Group also supports the AA by providing integrated guidance, strategy, and focus advocacy for NASA's science program.

The Policy Group's responsibilities include:

- Developing SMD's elements of Agency strategic plans, Directorate plans, and providing program support to the Budget Branch's Government Performance Results Act (GPRA) activity.
- Coordinating SMD international activities and relationships, including Agency and SMD international policy, agreements status tracking, export control, and international meetings.
- Managing advisory committees, including the Science Committee of the NASA Advisory Council (NAC), subcommittees of the NAC, including logistics, agenda development, and meetings operations.
- Overseeing and coordinating the activities of the NRC.
- Developing and coordinating testimony, Congressional correspondence, white papers, Congressional reports, proactive legislative outreach, action tracking, staff briefings, and OMB review actions.
- Monitoring, supporting development, and tracking of inter-agency agreements, coordinating inter-agency meetings, and coordinating with OSTP.
- Developing, coordinating, and staffing SMD exhibits for public outreach and informal education.
- Executing and coordinating SMD's outreach communications activities, particularly those listed in the SMD key events calendar, and including front office presentations, exhibits, conferences, web presence, communications strategies, and materials/products development and content reviews.
- Supporting the CS and Chief Engineer.
- Providing engineering support to SMD's access to space requirements.
- Coordinating SMD objectives and activities with the other Mission Directorates.
- Providing programmatic support and coordination to SMD's Mission Divisions in connection with the above responsibilities.

In support of SMD administrative functions, the Administration Group is responsible for the following:

- Directing the planning and implementation of all aspects of administrative management policies and functions for the SMD.
- Reviewing and making recommendations on proposed HQ institutional resources needed to carry out the SMD program.
- Developing management systems and procedures for use by SMD for the management of assigned programs and institutional responsibilities.

- Serving as principal liaison between SMD and HQ offices on administrative policy and business management issues; and evaluating agency-wide policies, systems and procedures for impact to SMD operations.
- Overseeing the Human Resources program for SMD HQ, including executive and non-executive staffing and development, recruitment, placement, training, organizational effectiveness, workforce requirements, employee relations and services, awards, personnel management, equal opportunity and conflicts of interest.
- Developing and issuing appropriate and consistent policies, instructions and interpretations of regulatory and professional requirements, control guidelines and other such communications to ensure effective management of SMD resources.

2.3.2.2 Budget

MPD's Budget Branch addresses SMD's budget function, which includes development, advocacy, execution, and evaluation of SMD's annual budget. The Budget Branch is responsible for the following:

- Directing the evaluation and assessment of SMD program and project budget requirements.
- Identifying key resource issues, conducting trade studies, and recommending alternatives and solutions.
- Managing the development of documentation presented to the OMB and the Congress for justifying and advocating the SMD program.
- Directing activities for implementing and executing the SMD budget. This includes the preparation of Congressional Operating Plans, ensuring that the SMD budget complies with legislative controls, and managing the distribution of funding to the Field Centers.
- Evaluating the financial performance of SMD programs and projects including rates of funds utilization, the distribution of civil service and contractor staffing, and the analysis of variances to established plans.
- Managing activities related to the SMD program performance evaluation to include the GPRA performance plan establishment, the annual Performance and Accountability Report development, and coordination with OMB on the Program Assessment and Rating Tool.
- Serving as principal liaison between SMD and the Office of the Chief Financial Officer on budget policies, systems, procedures, and issues.

2.4 SMD MANAGEMENT COUNCILS

Program Management Councils (PMCs) provide oversight of program management at NASA. NPR 7120.5 requires PMCs at the Agency and Directorate levels, to ensure appropriate levels of management oversight. The Agency PMC at NASA HQ, chaired by the NASA Associate Administrator, evaluates proposals for new programs, provides approval recommendations to the Administrator, and assesses existing programs for cost, schedule, and technical content. The Office of the Chief Engineer and the Program Analysis and Evaluation (PA&E) Office, which includes the Independent Program Assessment Office, directly support the Agency PMC. Each Mission Directorate also has a PMC. Since SMD is responsible to initiate and manage science activities for the Agency, SMD also has a management council for science activities in addition to its program management council.

The DPMC and SMaC, each composed of senior HQ executives, make studied recommendations to the SMD AA and DAA regarding:

- Missions to initiate from advanced concept study results
- Missions to select from proposals submitted in response to an AO
- Projects ready for transition from one phase of the program life cycle to the next
- Projects for cancellation

These councils hold reviews with proposal evaluators, independent review board chairs, and with projects to collect findings and understand status. The governance structure for these councils is as follows:

Table 2-1 defines the councils and the associated processes and documentation.

Table 2-2 associates councils with principal programmatic decisions.

The “program” and “science” decision bodies are, respectively, the DPMC and the SMaC. Lower level decisions may be delegated to the Divisions. The SMD AA and the SMD Chief Scientist are the SMaC’s co-chairs; the SASPE is the SMaC Executive Secretary. The SMD AA delegates the chair of the DPMC to the DAA/P. The DAA/P brings DPMC results to the SMD AA for final disposition. The SMD CS is the SMaC’s executive secretary. The executive secretary for the DPMC is the Program Executive (PE) whose project is the subject of the meeting. Table 2-2 shows differences in the process that depend on the category of the project under consideration. NPR 7120.5 identifies projects according to cost and priority as either Category 1, 2, or 3. Appendices A and B provide charters for the DPMC and SMaC, respectively.

At a project’s implementing Center, and any supporting NASA Centers, Center Management Councils (CMC) are established. Similar to the PMCs, these councils evaluate cost, schedule, and technical content to ensure that the project is receiving the necessary Center resources to accomplish its tasks, and from a technical authority viewpoint, to ensure compliance with the PCA, Program Plan, Project Plan, Center procedures and processes, and applicable NASA technical standards. The CMCs are tools of the technical authority chain of oversight and do not make programmatic decisions without the approval of SMD.

In accordance with NPR 7120.5, all programs report to the Agency PMC as "governing" as they begin Formulation with an approved Formulation Authorization Document. The “governing” PMC for a specific project is the highest-level PMC that approves the phase transitions during the project’s life cycle. The Agency PMC is the governing PMC for all Category 1 projects. The DPMC is "governing" for Category 2 and 3 projects; however, the Agency PMC or the Directorate may request that a Category 2 project be elevated to report to the Agency PMC. The SMD interfaces closely with the Agency PMC and the implementing CMC or management councils of other implementing organizations. Although the DPMC is governing for Category 3 projects, the SMD AA may delegate the Decision Authority responsibility for such projects to the Science Division Director if desired.

Table 2-1. Definitions of SMD Councils and Related Processes

Responsibility	Persons Involved**	Process and Outcome	Documentation
DPMC - Directorate Program Management Council	The DPMC consists of: DAA/Programs (chair), Science Division Directors, Director of Mgmt & Policy Division, SMD Chief Scientist, SMD Chief Engineer, Office of Safety and Mission Assurance Representative. Others invited to participate: SMD Dep AA, AAAs, Deputy Chief Scientists, Deputy Division Directors, SARA, Relevant program and project managers, Host center mgmt rep, and Representatives from: PA&E, Public Affairs, External Relations, Launch Vehicles, Office of General Counsel (OGC).	Activities directed toward conduct of in-depth assessment of programs/projects at critical milestones. Presentation of status by Project; presentation by Standing Review Board. Response by Project. Executive Session to make decisions, assign actions. Results are presented by the DAA/P to the SMD AA and DAA for final approval.	Plan as specified in DPMC Charter. Presentation materials; Published minutes of meeting; Actions to be tracked; List of attendees; Decision memo signed by the SMD AA. Executive Secretary will be delegated to the respective Division for the Program/Project. The PE is responsible for keeping records (including presentation materials), preparing minutes, and preparing letters that reflect commitments, agreements, and actions for approval by the Chair.
SMaC – Science Management Council	The SMaC consists of the SMD AA and Chief Scientist (co-Chairs), DAAs, AAAs, SASPE (executive secretary), SARA, Division Director/MPD, and the Division Directors/Science Divisions	Serves as the strategic science and program steering committee for the Directorate, including overseeing the development of Directorate-level solicitations, integrating science priorities, strategic initiatives, and programmatic implementation strategies, and assessing Directorate-level science and solicitation policies, programs, processes, priorities, and practices. Recommends to the selecting official selections for Directorate-level competitions, including: AOs, Directorate-level NRAs, Requests for Proposal where selection is assigned to HQ, and downselections for two-stage competitions.	Executive secretary records and distributes decisions and actions assigned by the Chair. For selections, upon decision, SMD AA signs selection statement; PE or Program Scientist drafts selection and non-selection letters for AA to sign, and documents results with backup information as appropriate.
Division Internal	No Front Office participation, Division Director plus staff of his/her own choosing	To be determined by Division Director.	To be determined by Division Director

** Other persons may be invited to attend by the convener of each selection or review; those attendees would be non-voting participants in areas where a vote is taken.

Table 2-2. Decision Responsibilities for Projects in Cross- and Single-Discipline Programs

Topic for Discussion		Decision Panel for Cross-Discipline Programs	Decision Panel for Single-Discipline Programs
AO selections for Phase A	Initial Mission or hardware selection; approval to go to Phase A	SMaC	Directorate SMaC, hardware selection may be delegated to Divisions
Approval or downselect to Phase B for 2-stage selection	Down selection from mission Concept Study Report to enter Phase B	SMaC	SMaC
Phase A-to-Phase B Initial Confirmation Review	Category 1	DPMC	DPMC
	Category 2	DPMC	DPMC
	Category 3	DPMC	Delegate to Divisions
Phase B-to-Phase C Confirmation Review (approval for Implementation)	For all new Category 1 or 2 programs or first projects	DPMC	DPMC
	For all new Category 3 programs or first projects	DPMC	DPMC
	For all Category 3 programs or projects	DPMC	DPMC
Special reviews within Phase C and D	For projects where governing PMC is at HQ	DPMC	DPMC
	For projects where governing PMC is not at HQ	DPMC	DPMC
Project "Cancellation" or "Cost Cap" review (including descopes)		DPMC	DPMC
Mission Readiness briefing for upcoming launches or major upcoming activities (such as Planetary orbit insertions and landings, and sample returns)		DPMC	DPMC
Mission extensions beyond prime phase (all Program-level requirements satisfied)		Division Director's decision based on Senior Review results.	Division Director's decision based on Senior Review results.
NRA selections for R&A grant and GO program		Division internal based on peer review process	Division internal based on peer review process
NRA selections for Technology projects (e.g., NMP)		SMaC	Division internal based on peer review process
RFP selections for missions or non-flight activity (via Goddard Space Flight Center)		SMaC	SMaC
Termination of operating missions (subject to NPD 8010.3A)		SMaC	SMaC

External teams perform various independent performance assessments throughout the life cycle and report to the PMCs up to the governing PMC. Independent assessments to be made and reported to the Agency PMC for Category 1 and elevated Category 2 projects are the pre-Non-Advocate Review (NAR), the NAR, and the Program Implementation Review. Other reviews will report at the Directorate level, and some at the Division or Center level. Section 5.7, "Evaluation Subprocess," describes these assessments. In the past, independent assessments were performed variously by an IPAO Independent Review Team, by an SMD-chartered independent review team, and/or by a Center-chartered review board. However, the "D" version of NPR 7120.5 established that a single Standing Review Board (SRB) be established and approved by Agency, Directorate, and Center management, and this SRB will conduct all relevant technical reviews during the life cycle of a project. SRB findings are to be reported back to each level of the management up to the governing PMC.

2.5 EMBEDDED MISSION SUPPORT STAFF

The SMD has NASA Mission Support Offices matrixed to the Directorate including Office of Legislative and Intergovernmental Affairs (OLIA), Office of Public Affairs (OPA), Office of the General Council (OGC), and Office of the Chief Engineer (OCE). Each Office has at least one person residing or "embedded" within the SMD office suite who participates closely in Directorate activities including attendance at Directorate staff meetings and other meetings as appropriate.

2.5.1 Office of Legislative and Intergovernmental Affairs

OLIA supports the SMD on congressional matters. This includes providing analysis on congressional actions, assisting in the preparation of testimony for a hearing, Questions for the Record, and responses to constituent correspondence. OLIA also provides support for special events on Capitol Hill (e.g., technology exhibits) or with a Congressman or Senator.

2.5.2 Office of Public Affairs

The OPA supports SMD on all media-related matters and some general public appearance activities. OPA prepares a variety of products and support that includes news releases, press kits, response-to queries and training assistance for media interviews. OPA also has the responsibility for coordinating the development of NASA Science Updates, and for coordinating other news conferences, media telecons and activities for broadcast on NASA TV and the NASA Portal.

2.5.3 Office of the General Counsel

The SMD Directorate Lead Counsel is an experienced attorney who is SMD's in-house counsel. The Lead Counsel, embedded from the OGC, identifies and facilitates resolution of legal issues and provides in-house legal advice and guidance in support of NASA's science mission goals. Specifically, s/he:

- Serves as the primary point of contact for the Mission Directorate in the HQ legal community.
- Provides direct advice and counsel to the SMD AA and, as requested, to the other senior leadership of the Directorate on issues affecting the Directorate.
- Identifies and coordinates the appropriate legal resources when the necessary advice and/or counsel requires more expertise.
- Directs, oversees, regulates, and coordinates the support provided by the OGC.
- Tracks the OGC's legal work in support of the Directorate.

2.5.4 Office of the Chief Engineer

The representative of the OCE is a senior engineer with extensive program management experience who assists SMD leadership in the formulation and implementation of program management and NASA engineering policies. This OCE position, designated Science Mission Directorate Chief Engineer (MDCE), provides coordination and analysis of programmatic and engineering activities across the science divisions and provides the Technical Authority path for differing engineering viewpoints. The MDCE serves as a member of the SMD PMC.

The MDCE works on a daily basis with science divisions, program executives and the DAA/P to maintain knowledge of SMD program/project status and provide engineering advice and support.

2.6 OTHER FUNCTIONAL OFFICES

There are three additional Mission Support Offices that are not “embedded” mission support staff, but provide vital support to SMD programs. They are OER, the Office of Procurement (OP), and the Office of Safety and Mission Assurance (OSMA).

2.6.1 Office of External Relations

OER supports the SMD on all international matters. OER coordinates the planning and preparation of meetings with existing or potential international partners. This includes providing assessment reports on any topic that might be discussed at the meeting. OER directly supports the SMD AA and the DAA during international trips and provide trip reports after meetings. The OER staff also coordinates the development of official agreements between NASA/SMD and international partners.

2.6.2 Office of Procurement

In support of SMD, OP:

- Reviews and concurs on the release of AOs, NRAs, and cooperative agreements.
- Reviews and approves Justifications for Other than Full and Open Competition.
- Processes and approves deviations to the NASA Federal Acquisition Regulations.
- Processes procurements for congressional earmarks.
- Holds acquisition strategy meetings and selection meetings for major acquisitions.
- Processes Administrator's Announcements of Notice for Significant Contract Actions.
- Advises and provides liaison support for complex and unique procurement issues, including the development of unique procurement strategies, PE training for contract administration of Jet Propulsion Laboratory tasks, indemnifications processing, and contractor performance liability reviews.

2.6.3 Office of Safety and Mission Assurance

The Agency Chief of Safety and Mission Assurance heads OSMA. In this function, the Agency Chief of Safety and Mission Assurance provides safety, reliability, maintainability, and quality assurance policy direction for all Agency programs, projects, facilities, operations, and activities as well as the functional leadership for the NASA Center Safety and Mission Assurance (SMA) organizations. In support of the SMD AA, OSMA reviews, surveys, and assesses NASA programs and projects to ensure they have implemented appropriate practices for SMA. OSMA also ensure there is an appropriate and effective mechanism to identify and disposition properly risks for all NASA programs, projects, facilities, and activities.

The Agency Chief of Safety and Mission Assurance designates an individual from OSMA as the SMD liaison. This individual serves as the day-to-day point of contact with and the matrixed safety officer for SMD. In this role, the designee assesses SMD programs, projects, facilities, and operations for compliance with Agency SMA policies and requirements. The designee

reports the results to the SMD AA, provides advice and counsel to the SMD AA on SMA-related matters, and participates as a member of the Directorate's PMCs. The designee also provides, an independent conduit for elevating Center SMD positions on waivers or dissenting opinions to AAs for SMD and OSMA, and providing technical studies of SMA-related issues upon request of the SMD AA.

2.7 SCIENCE SUPPORT OFFICE

The Science Support Office (SSO) at NASA Langley Research Center supports SMD in the acquisition of earth and space science missions and instruments. The SSO assists SMD in the development of AO solicitations. It leads the Technical, Management, and Cost evaluations of proposals and Phase A concept study reports. The SSO also conducts special studies and independent assessments for SMD, as assigned.

THIS PAGE INTENTIONALLY LEFT BLANK

3.0 STRATEGIC PLANNING

3.1 OVERVIEW

The Government Performance and Results Act of 1993 requires each Federal agency to produce a strategic plan every three years. NASA Policy Directive (NPD) 1000.0, *Strategic Management and Governance Handbook*, calls for NASA to issue the *NASA Strategic Plan* and subordinate documents and for each Mission Directorate to develop an Implementation Plan. The Science Mission Directorate's (SMD) issues its Implementation Plan, or the *NASA Science Plan* as it is typically named, every third year in concert with the *NASA Strategic Plan*. At the discretion of the SMD AA, a streamlined version of this process may be used to develop more frequent, focused Science Implementation Plans (e.g., for an upcoming fiscal year).

The *NASA Science Plan* communicates SMD intentions to the science community; its international, interagency, and industrial partners; and others. As described in NASA Procedural Requirement 1080.1, *NASA Science Management*, the *NASA Science Plan* documents the priorities and plans that shall be used as guidance for solicitations from SMD.

3.2 RESPONSIBILITY

The SMD Office of the Chief Scientist, in concert with the Management and Policy Division (MPD), is responsible for coordinating the NASA Science Plan's development. The SMD Science Divisions provide technical input to the Plan. The SMD Science Management Council (SMaC) provides ongoing review and oversight for SMD's strategic planning.

3.3 DEVELOPMENT PROCESS

Table 3-1 summarizes the process by which the Office of the Chief Scientist and the Management and Policy Division oversees the Science Plan's development. This process should be adjusted for the needs and constraints inherent in each planning cycle. While the process is generally sequential, the inherent uncertainty in the schedule and process means that some steps may be iterated or conducted in parallel.

Table 3-1. SMD Strategic Planning Development Process

Step	Implementation
ACTIVITY: 1. Plan the *NASA Science Plan* development process	
Form *NASA Science Plan* development team	▪ Identify needed roles and negotiate participation of individuals to fulfill these roles.
Obtain Agency guidance	▪ Identify points of contact with Agency-level strategic planning activities. ▪ Coordinate with Agency-level strategic planning activities on an on-going basis.
Incorporate lessons learned	▪ Incorporate lessons learned captured from the previous *NASA Science Plan* development cycle.
Establish development schedule	▪ Identify known schedule drivers, known sources of schedule uncertainty and reasonable assumptions concerning unknown schedule events, to produce a preliminary schedule. ▪ Update schedule as new information becomes available.
Assess the external and internal environment	▪ Identify and adopt a budget baseline against which the plan is to be developed. ▪ Review National Research Council (NRC) decadal surveys. Review current and planned decadal surveys and related NRC reports as the source of science community priorities. Identify any surveys or reports that will become available within the development period. ▪ Review additional current and planned external *NASA Science Plan* inputs. These include: – National and NASA policy direction

Step	Implementation
	– External advice such as that provided by the NASA Advisory Council (NAC), the Astronomy and Astrophysics Advisory Committee, and NRC inputs in addition to the NRC decadal surveys – Interagency coordination such as that provided by working groups and subcommittees under the National Science and Technology Council – Other potential significant science community inputs such as major community workshops.
Review current *NASA Science Plan*	▪ Review the current *NASA Science Plan*. ▪ Identify areas that may require modification in light of changes in the internal and external environment. ▪ Re-confirm or adjust the major goals, objectives, and principles.
Assess community input	▪ Distill and summarize recent community-based implementation advice (that complements and expands on decadal survey guidance) in each of the major SMD areas: Earth Science, Planetary Science, Heliophysics, and Astrophysics. ▪ Include input from the NAC Science Committee, NAC discipline subcommittees, and other appropriate community workshop groups. ▪ Conduct focused community planning activities, when needed, to provide specific input to the *NASA Science Plan*.
ACTIVITY: 2. Develop content for initial draft of the *NASA Science Plan*	
Develop draft *NASA Science Plan* elements	▪ Office of the Chief Scientist and the Management and Policy Division (MPD) develop outline of plan that balances previous plan against new top-level guidance and fiscal constraints as well as including specific crosscutting science elements. ▪ Science Divisions provide detailed material in support of general plan outline and work together to develop crosscutting themes.
Develop input to *NASA Strategic Plan*	▪ Draft and refine the SMD input. ▪ Get SMD leadership approval of SMD input submission to the NASA Strategic Plan.
Develop Science Area sections	▪ Draft the section for each Science Area based on the assessment of various inputs.
Update mission priorities	▪ Reconfirm or adjust, as needed, the relative priorities among missions.
Develop draft *NASA Science Plan* from template	▪ Integrate the following elements to complete the draft *NASA Science Plan*: draft *NASA Science Plan* elements, division area inputs, science goals and mission priorities; crosscutting topics; an introduction; summary; and appendices.
ACTIVITY: 3. Review and approve *NASA Science Plan*	
Obtain NAC Committee or Subcommittee review	▪ Obtain review(s) with the appropriate NAC science committee and appropriate discipline subcommittees.
Obtain internal SMD concurrences	▪ Circulate to SMD division management and senior SMD officials for concurrence, working through the Science Management Council (SMaC).
Circulate for internal NASA review	▪ Circulate to other Mission Directorates and NASA Offices for information and comment.
Obtain external industry review	▪ Make DRAFT document publicly available and solicit for comments from industrial partners.
Obtain NRC review	▪ Obtain a formal review from the NRC's Space Studies Board.
Obtain NAC review	▪ Obtain final review from the NAC Science Committee. Address and document responses to comments.
Generate, approve, and release updated drafts of the *NASA Science Plan*, as appropriate	▪ Address and document responses to comments as a result of the above reviews and comments, and generate updated drafts as appropriate.
Finalize and approve the *NASA Science Plan*	▪ Complete the *NASA Science Plan*. Solicit comments from within NASA, from the Office of Science and Technology Policy, and from the Office of Management and Budget. Address and document responses to comments.
Release *NASA Science Plan*	▪ Print, distribute, and post the *NASA Science Plan* on line. Work with the offices of External Relations and Legislative Affairs to ensure SMD provides appropriate notifications of the *NASA Science Plan*'s release.
Document lessons learned	▪ Identify and communicate useful information for the next *NASA Science Plan* development cycle.

3.4 SCHEDULE

SMD considers the following factors in developing the *NASA Science Plan* development schedule:

- The three-year planning cycle for the *NASA Strategic Plan* and individual Directorate Implementation Plans, and associated legal and policy requirements. See Section 3.1 for more information.
- Unique requirements of the current *NASA Science Plan* development cycle. The *NASA Science Plan* development schedule is dependent upon the *NASA Strategic Plan* development schedule, and adjustments may be necessary throughout the Science Plan development cycle.
- Updates to the *NASA Science Plan* following the three-year *NASA Strategic Plan* cycle. This may take the form of a yearly implementation plan release (see Section 3.1) that follows a shortened development schedule. Any update development must take into account that SMD inputs for the next issue of the *NASA Strategic Plan* are usually due about one year before the next issue of the *NASA Science Plan*, and the *NASA Strategic Plan* is usually released before the *NASA Science Plan's* release.

THIS PAGE INTENTIONALLY LEFT BLANK

4.0 RESEARCH PROGRAM MANAGEMENT

4.1 OVERVIEW

This chapter describes the process by which the Science Mission Directorate (SMD) formulates and implements research and technology programs as described in NASA Procedural Requirement (NPR) 7120.8, *NASA Research and Technology Program and Project Management Requirements*. SMD's research activities consist of its research and analysis (R&A) programs and its other research programs. Section 4.2 discusses SMD's R&A programs. Section 4.3 describes its other research programs. Appendix A, "Policy and Procedure Resources," contains resources and references for SMD research managers.

4.2 RESEARCH AND ANALYSIS PROGRAM MANAGEMENT

This section describes the process by which SMD formulates and implements R&A activities that SMD manages or funds. The scope of SMD's R&A activities is described in *The Science Plan for NASA's Science Mission Directorate 2007-2016*, Section 3.2.1, "Role of Scientific Research and Analysis," and Section 3.2.2, "Research Solicitation and Selection." NPR 1080.1, *Requirements for the Conduct of NASA Research and Technology*, and NPR 7120.8 establish the process by which SMD conducts and manages its R&A activities. *The Guidebook for Proposers Responding to a NASA Research Announcement* describes the processes SMD uses to solicit, evaluate, and select R&A activities.

4.2.1 Organization of R&A Programs

SMD manages its R&A activities hierarchically as shown in **Figure 4-1**:

- SMD solicits proposals for research investigations. A Principal Investigator (PI) leads each investigation.
- Program elements represent a grouping of investigations. Program Officers manage program elements.
- A Discipline Area is a collection of one or more program elements that are managed together, usually because they are funded from the same budget line. A Discipline Area Manager manages a Discipline Area. Depending on the SMD Division, a Discipline Area Manager may also be called a Program Officer, a Discipline Scientist, or a Research Program Manager. The name "Program Officer" is used for a Discipline Area Manager of a Discipline Area with a single program element.
- A Research Program is all the research activities undertaken in a Division, which includes all Division Discipline Areas and program elements. The Division Director or the Division Associate Director for Research is the Research Director for the Research Program. The Division R&A Lead is responsible for the day-to-day management of the Research Program.

NPR 7120.8 sets requirements on the management of research and technology development. These include roles and responsibilities, milestones, documentation, and oversight. Sections 4.2.2 and 4.2.3 describe SMD's implementation of NPR 7120.8's requirements.

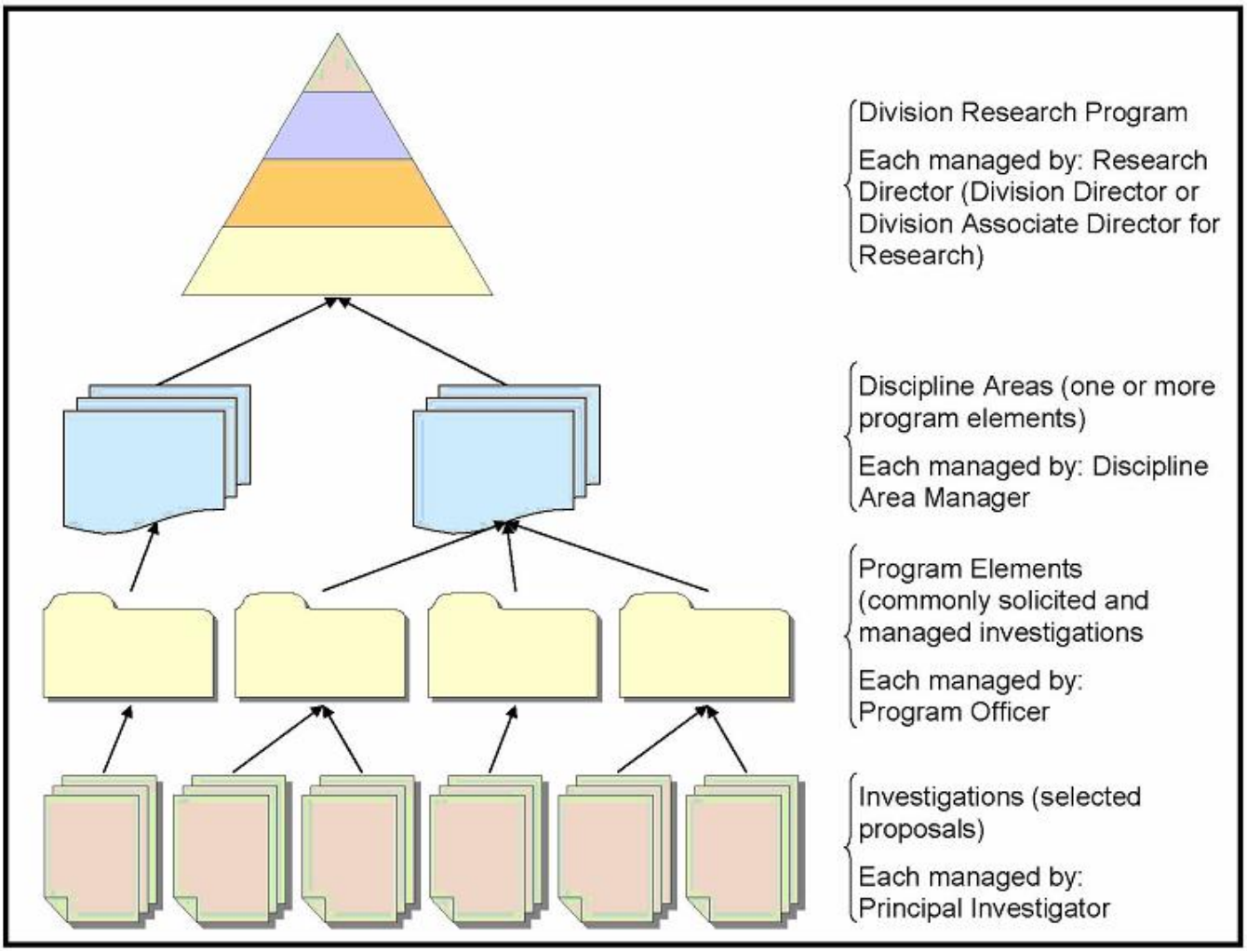

Figure 4-1. Organization of SMD Division R&A Programs

4.2.2 R&A Program Management Roles and Responsibilities

Each SMD Division has a single Research Program. This includes all of the Division's R&A, Supporting Research and Technology (SR&T), and similar research activities.

SMD's Division Research Programs are implemented as Cross Program Research as defined in NPR 7120.8. **Table 4-1** lists the NPR 7120.8 and SMD research management roles and responsibilities relevant to SMD's research management processes and activities. The first column gives the role as defined in NPR 7120.8, the second column lists the equivalent role in SMD, and the third column lists the relevant research management responsibilities.

Table 4-1. SMD Research Management Roles and Responsibilities

7120.8 Roles	Equivalent SMD Roles	Responsibilities
NASA Associate Administrator (AA) *	(same)	No responsibilities for Cross Program Research as defined in NPR 7120.8.
Agency Program Management Council (PMC) *	(same)	No responsibilities for Cross Program Research as defined in NPR 7120.8.
Mission Directorate Associate Administrator (MDAA) *	Associate Administrator for Science Mission Directorate (SMD AA)	The SMD AA is responsible to the NASA Administrator for NASA's scientific research Programs. The SMD AA has oversight of all SMD Research Programs and co-chairs the SMD Science Management Council (SMaC). The SMD AA approves Program Plans and Cross-Program Research Plans and appoints and delegates SMD's research responsibilities. The SMD AA has ultimate responsibility for SMD budgets, schedules, and Programs.
Mission Directorate Program Management Council (PMC) *	SMaC	The SMaC is the Mission Directorate PMC for SMD Research Programs. Co-chaired by the SMD AA and the SMD Chief Scientist, it sets science policy for SMD, provides oversight for SMD research programs, and approves the development of appropriate SMD solicitations (e.g., the Research Opportunities in Space and Earth Sciences [ROSES] NASA Research Announcement [NRA]) to implement these research programs. The SMaC also provides oversight for the R&A Programs.
	SMD Chief Scientist	The SMD Chief Scientist co-chairs the SMaC and ensures the quality of SMD's science processes and programs.
	SMD Senior Advisor for Research and Analysis (SARA)	The SARA has responsibility to the SMD AA for the success of SMD's research programs. The SARA coordinates and communicates SMD R&A policy and recommends process improvements. The SARA represents the science community's priorities for the conduct of R&A to the SMD AA.
	SMD Senior Advisor for Science Process and Ethics (SASPE)	The SASPE manages SMD's solicitation process for the SMD AA. This includes issuing and amending ROSES. The SASPE is responsible for improving SMD's R&A processes including the solicitation, evaluation, selection, and award processes.
Research and Technology (R&T) Program Lead or Research Director *	Science Division Director (or designated Division Associate Director for Research)	Science Division Directors plan and conduct Division Research Programs consistent with priorities established by the NASA Strategic Plan, the NASA Science Plan, and the SMD AA. Each Division Director manages his/her Division Research Program and associated budget and resources. Division Directors (or their designees) serve as a Research Directors for the Division's Cross-Program Research. They authorize solicitations and assign Program Officers to manage solicitations, evaluations, and selection recommendations of proposals. They also act as the Selection Official for SMD's NRAs including ROSES.
	Division R&A Lead	The Division R&A Lead represents the Division at SMD-wide coordination meetings; the Division R&A Lead serves as the principal point of contact and communication between the SMD Front Office, especially the SARA and the SASPE, and the Division program officers.
R&T Portfolio Project Lead *	Discipline Area Manager (also Discipline Scientist, Research Program Manager)	Discipline Area Managers manage their respective R&A Programs; serve as the NASA interface to their respective science communities; represent their science communities to NASA management; plan the solicitation of research proposals for their Discipline Area through the NRA process; and participate in planning and defending their budgets as part of the NASA budget formulation process. For single program element Discipline Areas, the Discipline Area Manager also serves as the Program Officer.
	Program Officer	A Program Officer manages the solicitation process (planning, solicitation, evaluation, selection, and award) for the investigation(s) associated with a program element solicited through ROSES. The Program Officer usually serves as the technical officer for the awarded investigation(s) but may delegate this responsibility.

7120.8 Roles	Equivalent SMD Roles	Responsibilities
	Principal Investigator (PI)	Every proposal submitted to NASA must be led by a single PI. The PI is responsible for the management and conduct of an awarded investigation. The PI communicates directly with the SMD Program Officer. PI Roles and responsibilities are discussed in the *Guidebook for Proposers Responding to a NASA Research Announcement (NRA)*.

* Refer to 7120.8 for detailed responsibilities.

4.2.3 R&A Program Management Activities

NPR 7120.8 describes R&T Program and R&T Portfolio Project requirements by which NASA conducts its R&T development activities. SMD's Division-wide research programs are Cross-Program Research as described in NPR 7120.8. In general, SMD's research program elements (single solicitations within ROSES) are R&T Portfolio Projects as described in NPR 7120.8. As appropriate, a single program element is managed as a Portfolio of investigations, or several research program elements comprising a Discipline Area may be managed as a single Portfolio.

Table 4-2 lists NPR 7120.8 and SMD research management key decision points (KDPs) and required reviews relevant to SMD's research management processes and activities.

Table 4-2. SMD Research Management Key Decision Points and Required Reviews

7120.8 Activity	Equivalent SMD Activity	Explanation
KDP 0 (start of new research program)	SMD AA establishes a new Research Program	SMD's four research programs, one per Division, are ongoing activities. The SMD AA has the authority to establish a new research program by appointing a Research Director.
KDP 1 (approve program plan)	SMD AA signs Research Program Plan	Each research program has a Research Program Plan. The SMD AA is the approving authority for the Research Program Plan.
Program Status Review	Review by SARA	The Senior Advisor for Research and Analysis conducts regular reviews of Division Research Programs on behalf of the SMD AA. (Section 4.2.5.4)
Program Independent Assessment	Program Assessment by the National Research Council or other independent committee	Review of each Research Program is conducted periodically (generally every 4 or 5 years) as documented in the Research Program Plan. (Section 4.2.5.4)
KDP A (start of new portfolio project)	Authorization to establish a new program element (or collection of program elements)	The Division Director decides what program elements are needed for the Division Research Program, what research should be supported, and what research should be competed. The Director authorizes the Program Officer to write ROSES program elements. Authority to start a new program element is delegated from the SMD AA to the Division Directors. (Section 4.2.4.1.1, Section 4.2.4.1.2)
Project Formulation Review	Review for solicitations (e.g. ROSES and its program element appendices)	The Program Officer, Discipline Area Manager (if any), Associate Director for Research (if any), and Division Director review the solicitation. (Section 4.2.4.1.1)
KDP C (approve project plan)	Approval for solicitations (e.g. ROSES and its program element appendices)	Approval is obtained by the concurrence of the Division Director on ROSES or a ROSES amendment creating a new program element. ROSES incorporates the *Guidebook for Proposers* which contains further documentation of the relevant processes. (Section 4.2.4.1.1, Section 4.2.4.1.2)
Project Status Review	Annual review of research program elements	The Division Director reviews the research program elements during the annual budget formulation process (summer) and the annual ROSES development process (fall); the review results in a decision to solicit or not. (Section 4.2.5.2)

7120.8 Activity	Equivalent SMD Activity	Explanation
Project Independent Assessment	Peer review of proposals	The investigations that comprise a program element are reviewed through the peer review of proposals submitted to carry out the objectives of the research program element. (Section 4.2.4.2)
Start portfolio cycle	Decision to write a ROSES program element	The Division Director authorizes a ROSES program element to be written. (Section 4.2.4.1.1, Section 4.2.4.1.2)
Portfolio Formulation Review	Review for a ROSES program element	The program officer, Discipline Area Manager (if any), Associate Director for Research (if any), and Division Director review the solicitation. (Section 4.2.4.1.1)
KDP X (approve portfolio solicitation document)	Authorization to Proceed (ATP) for an Announcement of Opportunity (AO), Cooperative Agreement Notice (CAN), or NRA	For a new solicitation, such as ROSES, ATP is obtained by the concurrence of the Selection Official and the SMD AA for release of the solicitation. For an amendment to an existing solicitation, such as adding a new program element to ROSES, ATP is obtained by the concurrence of the Selection Official (typically the Division Director). (Section 4.2.4.1.1, Section 4.2.4.1.2)
Portfolio Peer Review	Peer review of proposals	Proposals submitted in response to a ROSES program element are subjected to peer review. (Section 4.2.4.2)
KDP Y (approve portfolio selection document)	Approval of Selection Decision Document	The Selection Official approves the selection of proposals by signing the Selection Decision Document. (Section 4.2.4.2)
Portfolio Status Review	Review of annual progress reports	The Program Officer reviews the annual progress reports for individual investigations and the Division Director reviews the portfolio in determining what, if any, new investigations should be solicited each year. (Section 4.2.5.1, Section 4.2.5.2)
KDP Z (completion of investigations)	Acceptance of final report	An investigation is completed when the Program Officer approves the PI's final report. (Section 4.2.5.6.1)
KDP F (transfer or termination of portfolio project)	Annual review of research program elements	Research program elements are reviewed annually during the annual budget formulation process (summer) and the annual ROSES development process (fall) which results in a decision to continue or not. (Section 4.2.5.6.2)

4.2.4 Managing the Proposal Cycle

SMD uses open competitive solicitations and scientific peer review as the fundamental means by which it selects its investigations for research programs. NPR 1080.1 establishes the minimum standards for the conduct of the proposal cycle. Proposals for R&A investigations are solicited through NRAs and CANs, principally the ROSES NRA, developed by SMD research program staff as discussed in the following sections. Proposals to participate in NASA's space flight science missions through the provision of flight hardware are solicited through AOs developed by SMD Program staff in collaboration with the appropriate Project office at a NASA Center as discussed in Section 5.3.6, "Flight Project Solicitations."

4.2.4.1 Soliciting Proposals through NRAs including ROSES

The NRA is used to solicit basic research that is characterized as being relatively low-cost and generally not requiring the development of spaceflight hardware. In addition, NRAs may be used to solicit basic research requiring the development of experimental hardware for airborne and suborbital investigation, the development of experimental hardware for technology flight demonstrations, or participation on the science team for a spaceflight mission.

The funding instrument for a NRA is typically a grant. However, it may also be a contract, a cooperative agreement, or an intra- or inter-agency transfer depending on the nature of the investigation and the proposing institution.

A CAN is used for many of the same basic objectives as the NRA. However, the CAN assumes a close working relationship between the proposing organization and NASA, with each side providing services and/or equipment necessary to complete the proposed activities. The funding instrument for a CAN is the cooperative agreement.

Guidance and policy related to NRAs and CANs includes the following:

- NPR 5800.1, *The Grant and Cooperative Agreement Handbook*, covers policies and procedures relating to the award and administration of NASA grants and cooperative agreements.
- NPR 5810.1, *Standard Format for NASA Research Announcements (NRAs) and other Announcements for Grants and Cooperative Agreements*, the official guidance for developing an NRA.
- The *Guidebook for Proposers Responding to a NASA Research Announcement* provides complete, detailed guidance for proposers to follow for preparing and submitting a response to the standard SMD NRA. It also includes the proposal review and selection processes. It is incorporated into all SMD NRAs, thereby making its compliance mandatory for proposers and program officers unless otherwise amended in the specific NRA.

4.2.4.1.1 Developing ROSES Program Elements and the ROSES NRA

Annually, SMD issues the omnibus NRA called ROSES. With few exceptions, ROSES incorporates all SMD research solicitations for a given calendar year. ROSES is issued in mid-February of each year, with due dates spread throughout the year starting approximately 90 days after the ROSES release date and continuing for 12 months (May of current year to April of following year). New awards selected under ROSES typically have a period of performance that starts in the following fiscal year. The ROSES NRA is the product of the entire SMD research staff rather than a single Program Officer.

Every science or technical discipline in SMD typically has a solicitation in ROSES either annually or every several years; ROSES also incorporates solicitations for unique activities funded one time. These individual solicitations are referred to as program elements in ROSES. Each program element will have its own requirements for the content of solicited investigations, its own due date, its own budget for new awards, and one or more Program Officers to manage it.

ROSES consists of a “Summary of Solicitation” followed by appendices. The “Summary of Solicitation” establishes the common requirements for all program elements and follows the requirements in NPR 5810.1. The “Summary of Solicitation” also describes any requirements that are unique to SMD (e.g., programmatic relevance, R&A policies, and education/public outreach opportunities). ROSES has appendices for the SMD Science Divisions. Each appendix consists of a Division research program overview and an appendix section for each program element offered.

Any SMD research solicitation may be issued as a program element within ROSES as long as it follows the standard processes and policies that are established in the ROSES “Summary of Solicitation.” The standard evaluation processes and criteria must be used. Standard evaluation criteria are intrinsic merit, programmatic relevance, and cost realism and

reasonableness. Program officers are encouraged to tailor these criteria by identifying specific factors for the evaluation criteria in a program element.

The current ROSES NRA can be found at http://nspires.nasaprs.com/ (select “Solicitations” then “Open Solicitations” then “NNHnnZDA001N” where nn is the current fiscal year).

SARA, in collaboration with SASPE, is responsible for the annual issuance of ROSES. The process for developing ROSES each year is generally as follows (KDPs reference Table 4-2 and NPR 7120.8):

- Early October: SARA puts out a call for program elements for the next year’s ROSES NRA.
- Early November: Division Directors determine what program element solicitations are required (KDP A). SARA and OCS review the proposed ROSES program elements for balance, completeness, and appropriateness.
- Mid-November: Program Officers draft appropriate program element text, draft program element text is submitted to SARA through the SMD server.
- Early December: SARA and the Program Officers finalize the program elements and SARA finalizes the “Summary of Solicitation.”
- Mid-December through early January: Obtain concurrence from the SMD Division Directors (KDP X, KDP C), SMD content area and policy leads, and the Offices of External Relations (OER), Procurement, and General Counsel (OGC).
- SASPE acquires input from other mission support offices as required by NASA FAR Supplement (NFS) 1835.016-71(b)(1).
- Mid-January: SMD AA provides final authorization for release of ROSES (KDP X).
- Late January: ROSES is announced through Federal Business Opportunities (FBO) and the NASA Solicitation and Proposal Integrated Review and Evaluation System (NSPIRES) email list. ROSES is prepared for electronic release through NSPIRES and Grants.gov.
- Early February: ROSES is released in NSPIRES soon after the presentation of the President’s budget proposal to Congress.

4.2.4.1.2 Amending ROSES

Additional program elements may be added to ROSES during the calendar year, or draft language may be replaced with the final solicitation language. If a new or final program element follows the standard policies and procedures in the “Summary of Solicitation,” then the program element may be added as an amendment to the ROSES NRA. ROSES should be amended at least 90 days prior to the new program element’s due date.

ROSES may also be amended to clarify requirements or constraints in a program element, to change the due dates for a program element, or to cancel a program element. For clarifications, ROSES should be amended at least 30 days prior to a program element’s due date. Special requirements for cancellations are given in Section 4.2.4.1.4.

SARA, in collaboration with the SASPE, is responsible for ROSES amendments. The process for developing ROSES each year is generally as follows (KDPs reference Table 4-2 and NPR 7120.8). ROSES amendments can generally be released within one week of the Program Officer submitting draft text to SASPE.

- Division Director gives Program Officer approval to write a ROSES amendment (KDP A).
- Program Officer submits draft ROSES amendment to SASPE.
- Amendments to reduce or eliminate funding for an announced ROSES program element have additional requirements; see Section 4.2.4.1.4.
- Following finalization of text with program officer, SASPE approves the ROSES amendment to begin concurrence.
- Program Officer and Division Director concur on ROSES amendment (KDP X, KDP C).
- SASPE authorizes release of ROSES amendment.
- ROSES amendment is announced through NSPIRES email list and is released in NSPIRES.

4.2.4.1.3 Developing Stand-alone NRAs and CANs

Sometimes a new research opportunity may be announced through a solicitation other than an amendment to the ROSES NRA. The process for a stand-alone solicitation follows a similar solicitation process as the ROSES NRA except it has its own distinct release and implementation cycle and unique contractual terms and conditions.

- Following a recommendation from the Science Management Council (SMaC), the SMD AA authorizes the writing of a NRA or CAN. A Program Officer is assigned to the solicitation.
- The Program Officer follows NASA regulations and incorporates current SMD policies into the draft NRA or CAN. The draft NRA or CAN is submitted to SASPE.
- Following finalization of text with the Program Officer, SASPE approves the draft NRA or CAN to begin concurrence.
- NRA or CAN is concurred on by the Program Officer, interested Division Directors, SMD content and policy leads, and the Offices of External Relations, Procurement, and General Counsel.
- SASPE acquires input from other mission support offices as required by NFS 1835.016-71(b)(1).
- SMD AA provides final authorization for release of NRA or CAN.
- NRA or CAN is announced through Federal Business Opportunities and the NSPIRES email list.
- NRA or CAN is released in NSPIRES.

4.2.4.1.4 Canceling a NRA, CAN, or Program Element

On rare occasions it may be necessary to cancel a solicitation after it has already been released. Such an action should be taken with great care, as community members are already investing time and effort into planning investigations and working on proposals. Because of the impact that canceling a solicitation has on the community, and because of the possibility of external inquiries under these circumstances, sufficient notification must be given to appropriate stakeholders before such an action is taken.

Amendments to reduce or eliminate funding for an announced ROSES program element must meet the requirements in Science Policy Directive (SPD)-06, *Handling Reductions in Research Program Budgets*, including approval by the SMD AA or by SARA, as designated by the SMD AA (see Appendix A.1.1, “SMD Policy Documents.”)

The general process for issuing an amendment that cancels a solicitation is as follows:

- A standard notification for cancellation must be prepared. This notification includes:
  - Identification of the solicitation being cancelled;
  - The specific action and schedule being proposed;
  - The rationale for the action;
  - The specific affected parties, where known, including PI, institution, city, state, and Congressional district;
  - Responses appropriate for a media inquiry to standard questions such as: *Why is this action necessary?, Are these programs cancelled?, Are any other programs being cancelled?*

After approval by the SMD AA, the standard notification should be provided to the Office of the Administrator (Chief of Staff), the Office of Public Affairs (SMD public affairs officer), and the Office of Legislative Affairs (embedded liaison). The SMD AA may decide that notification of Office of Management and Budget (OMB) and Office of Science and Technology Policy (OSTP) is also necessary.

Announcement of the cancellation may take place no sooner than 24 hours following notification of stakeholders.

4.2.4.2 Receiving, Evaluating, and Selecting Proposals

SMD uses peer review to evaluate the individual strengths and weaknesses of proposals submitted in response to an NRA. A Program Officer develops the selection recommendation based on the strengths and weaknesses in the peer review's evaluation reports and on extant budgetary and programmatic considerations. The Program Officer then makes a recommendation for selection to the appropriate Selection Official. The process is described in the *Guidebook for Proposers Responding to a NASA Research Announcement's* Appendix C "Proposal Processing, Review, and Selection."

The process for receiving, evaluating, and selecting proposals is described below. KDPs reference Table 4-2 and NPR 7120.8. The exact order and timing of these activities may vary depending on the circumstances of the specific program element. Execution of these processes requires that the Program Officer:

- Arrange/coordinate the logistics (date, location, size, etc.) for the peer review with the NASA Research and Education Support Services (NRESS) task lead as early as possible, typically at least 6 weeks prior to proposal receipt.
- Determine whether the review will be conducted entirely through a peer review panel or through a combination of non-panel (a.k.a. mail-in) reviews and panel reviews. This determination may be revised after receipt of Notices of Intent (NOIs) and proposals.
- Review the NOIs to begin identifying qualified and unbiased reviewers or those with manageable conflicts of interest. Complete identification of reviewers after receipt of proposals. Conflicts of interest must be managed in compliance with SPD-01A, *Handling Conflicts of Interest for Peer Reviews*. For foreign reviewers, avoid export control issues by following SPD-memo, *Procedures for the Use of Foreign Reviewers for AO Proposals*.
- Contact candidate reviewers to gain their agreement to serve on the review panel.

- Send the names of the identified reviewers to the NRESS task lead, so that travel arrangements can be initiated for panel reviewers.
- Upon receipt of proposals, review proposals for compliance with the solicitation; inform PIs of noncompliant proposals of the reasons for the determination.
- Handle late proposals according to SPD-02, *Handling Late Proposals*.
- Assign proposals to the reviewers, both panel and non-panel, and inform the NRESS task lead of assignments, so the NRESS task lead can provide access to proposals to reviewers through NSPIRES. Identification of reviewers and assignment of proposals should be completed no later than four full weeks prior to the meeting of the panel in order to give reviewers adequate time to review proposals.
- Start the peer review panel meeting with a plenary session. The evaluation criteria, peer review process, and expectations for quality written evaluations are reviewed with the peer review panel members during the plenary session. Monitor the conduct of the review panel during the peer review panel meeting to ensure that each proposal is appropriately reviewed and that an adequate and appropriate consensus or summary evaluation is developed for each proposal.
- Based on the findings of the peer review as documented in the consensus or summary evaluations, develop a Selection Recommendation Package and a Selection Decision Document (see SPD-08, *Requirements for Selection Decision Documents for NASA Research Announcements including ROSES*) that is based on the peer reviews, programmatic priorities, and available budget resources.
- Within eight weeks following the peer review panel meeting, present the selection recommendations to the Selection Official. The Selection Official reviews the recommendations and supporting information from the peer review. Obtain approval of selection recommendations with the Selection Official signing the Selection Decision Document and approving the selection of investigations for award (KDP Y).
- After the Selection Official has approved the selection recommendations, provide informal notification to the proposers. Informal notification is a short email informing the proposer that his/her proposal falls into one of three categories, i.e.: (i) it has been selected, (ii) it is selectable (but it is not selected at this time), or (iii) it has not been selected, and that a notification letter will follow. Informal notification is optional.
- If a selected Jet Propulsion Laboratory (JPL) proposal requested approval as Fundamental Research, submit the proposal to the Office of Chief Scientist for designation as Fundamental Research. After designation decision by the Office of Chief Scientist, include appropriate language in the selection letter.
- If a selected proposal proposes any international participation and the proposal meets any of the requirements in SPD-memo, *OER Review of SMD Research Proposals that have International Participation*, then the proposal must be submitted to OER for review as described in the policy directive prior to PI and Congressional notification.
- Develop and coordinate with NRESS the preparation of selected, selectable (not selected at this time), and declined letters. Letters should be based on the SMD selection letter template. Letters may be signed by the Selection Official or the Program Officer depending on Division policy.

- Review and approve summary of selected proposals for Congressional notification; Congressional notification occurs prior to sending out the notification letters.
- Obtain final decisions on selectable proposals as soon as possible and coordinate with NRESS for the preparation of selected or declined letters. When decisions are delayed, inform the PIs of selectable proposals of the continuing delays.
- Approve the posting of abstracts for selected proposals in NSPIRES within two weeks of sending notification letters.
- Handle any reclamas of declined proposals according to SPD-09, *Requesting Reconsideration of NRA Proposal Declination*.

4.2.4.3 Awarding Selected Proposals

For non-NASA proposers, NRA awards are issued as grants, contracts, interagency transfers (IATs), or cooperative agreements depending on the nature of the proposed research activities and the proposer's institution. Some NASA policies on awards are given in *The Guidebook for Proposers to NASA Research Announcements,* Appendix F, "Proposal Awards and Continued Support"; see also NPR 5800.1, *The Grant and Cooperative Agreement Handbook*.

For NASA researchers, funds are directly transferred from Headquarters (HQ) to a Center as a Research and Technology Objectives and Plans (RTOP) award. NASA policy is to provide all funds for an investigation to the PI institution; the PI institution is responsible for issuing subawards to the co-investigators (co-Is). In those cases where it is not possible for the PI institution to issue a subaward to a co-I (e.g., the PI is at a university, and the co-I is at a NASA Center), NASA will issue an award directly to the co-I.

SMD has developed the Research and Analysis Program Tracking of Resources (RAPTOR) system to facilitate the approval and release of funding for research awards, as well as the tracking of data about the awards and the award process. RAPTOR is further described in Section 4.2.6.3.

The process for issuing awards for funding selected investigations is described below. Although each of these steps can be done by the Program Officer, many of them are performed by support personnel working as a proxy for the Program Officer. These support personnel include the NRESS task lead, the Division program support specialist, and R&A program support personnel in SMD and at NASA Centers. The exact distribution of tasks varies from Division to Division.

- Where necessary, negotiate a final budget and statement of work with the PI.
- If the total amount awarded over the length of the selected investigation differs from the proposed budget by more than 20 percent, request a revised budget and statement of work.
- Create an activity in RAPTOR for each selected proposal; approve the budget for the activity for its entire period of performance, i.e. the budget for all approved program years.
- For JPL activities that are designated Fundamental Research, indicate designation as Fundamental Research in RAPTOR.
- Create a task in RAPTOR for each funding award that will be used to fund the activity; the default is one task per activity, but some activities will require multiple tasks. Determine the type of funding award that will be used for each task (e.g., grant, RTOP, IAT, etc.). Request

the funding in RAPTOR for each task's first year. Be careful to follow the current requirements for RAPTOR usage to avoid errors in award processing.

- For funding awards other than RTOPs, assemble and approve the technical requirements package (a.k.a. award package) for each funded task. Prior to late 2007 this package is a paper package; starting in 2008 this package is an electronic package in NSPIRES. Send the technical requirements package to the award processing office; for most HQ grants, this office is the HQ Grants Administration Office (HGAO).

Detailed instructions and required data entry directions are available for the use of both NSPIRES and RAPTOR.

4.2.5 R&A Oversight

SMD is responsible for a number of research oversight activities after the solicitation has been awarded. This includes monitoring investigations and research portfolios, performing risk management for research programs, discipline areas, and program elements, closing investigations, and closing and or transferring portfolio research. NPR 7120.8 requires that SMD regularly review the research program as a whole and conduct periodic independent assessments of the research program.

4.2.5.1 Review of R&A Investigations

Program Officers are responsible for oversight of the SMD-funded investigations in their respective program elements, including decisions for continued yearly funding supplements (also called continuations) of multiple-year investigations selected in prior years. In accordance with NPR 5810.1, the investigation oversight process involves the following activities:

- The PI is required to submit a Yearly Progress Report to NASA a minimum of 60 calendar days prior to the anniversary date of the award. The PI is responsible for ensuring that the Program Officer and the Grant Officer (where applicable) both receive this report. The responsibility and timing for sending PIs reminders to submit Progress Reports depends on the award type as follows:
  - **Grants:** The NASA Shared Services Center (NSSC) will send out a friendly reminder to PIs 10 days before this deadline. The Program Officer must send out the reminder for grants the Goddard Space Flight Center (GSFC) issued before May 1, 2006.
  - **RTOPs:** Funding for RTOPs must be distributed at the beginning of the fiscal year. Therefore the effective anniversary date for RTOPs is October 1 of each year. The Program Officer must send out reminders.
  - **IATs:** The Program Officer must send out reminders.
  - **Contracts:** The Contract Officer sends out reminders.
- The Program Officer monitors and evaluates the progress of the awarded investigation by reviewing the Progress Report, as well as other information as may be available (e.g., reprints, preprints, presentations at scientific meetings, site visits and reviews, etc.).
- If the Program Officer finds the Progress Report acceptable, and the financial resources to support the supplement are available, then continued funding of the task may be authorized. If the Progress Report is not acceptable, the Program Officer may request additional information or a clarification and may repeat the review cycle. If the Program Officer does not feel that it is in the Government's interest to continue funding the task (or if the required

resources are not available), then he/she may deny continuation and recommend termination of the award. This is considered a very serious action for which an extremely strong case must be made. Concurrence by the Division Director must be obtained prior to termination of any R&A award.

- The Program Officer indicates in RAPTOR approval of the Progress Report and requests the annual funding supplement for the investigation. Progress Report approvals and funding requests per type of R&A award vehicle are discussed below:
  - **Grants:** Indication of approval and request for funding in RAPTOR is sufficient to initiate continuation funding. For grants issued by GSFC, the Progress Report must be forwarded to HGAO. For grants issued by the NSSC, it is not necessary to forward the Progress Report to the NSSC.
  - **RTOPs:** Request for funding at the beginning of the fiscal year is sufficient to initiate continuation funding.
  - **IATs:** In addition to indication of approval and request for funding in RAPTOR, a continuation technical requirements package (TRP) must be prepared and given to the Program Support Specialist.
  - **Contracts:** In addition to funding release in RAPTOR, a continuation TRP must be prepared. Quarterly reports are received from the PI. Quarterly invoices are received from the Contract Officer. The invoices must be signed and dated and returned to the Contract Officer.

4.2.5.2 Review of R&A Program Elements

Program Officers use an assessment process to look at the composition and productivity of their portfolios by:

- Assessing relative performance of individual tasks through review of annual Progress Reports (see Section 4.2.5.1, “Review of R&A Investigations”); and
- Looking at balance among programmatic priorities within individual program elements.

During the annual planning process Program Officers determine the program elements for each year’s ROSES NRA. The Program Officer makes adjustments to the program elements to direct the science community toward those areas of program elements for which NASA desires more effort and away from more mature or less critical areas.

Program Officers may consult with the appropriate community-based groups, including appropriate working groups and advisory subcommittees, and/or community-produced documentation, such as National Research Council (NRC) reports. This is done to determine how and when to make adjustments. Program Officers may also consult with their counterparts in other U.S. Government agencies to determine how and when to make adjustments compatibly within interagency cooperative programs.

4.2.5.3 Review of R&A Discipline Areas

Groups of Program Officers led by the Discipline Area Manager look across the program elements in a Discipline Area using an assessment process to review a specific discipline area. During the annual planning process for determining the program elements for each year’s ROSES NRA, new program elements are created to supplement those objectives of the

Discipline Area for which a critical need for additional research investigations is identified. The Discipline Area Manager may consult with the appropriate community-based groups, including appropriate working groups and advisory subcommittees, and/or community-produced documentation such as NRC reports, to determine how and when to make adjustments.

4.2.5.4 Review of R&A Programs

NASA R&A Programs use independent, external reviews conducted by NASA Advisory Council (NAC) science subcommittees to measure annually the effectiveness of research programs against Annual Performance Goals as identified in NASA's Integrated Budget and Performance Document. The results of this review are reported in the NASA Performance and Accountability Report as required by the Government Performance and Results Act (GPRA).

The Research Director looks across the program elements and Discipline Areas in the Division R&A Program using an annual assessment process. During the annual budget process and during the annual planning process for determining the program elements for each year's ROSES NRA, funding and solicitations may be moved from research objectives that are more mature or less programmatically critical to areas that require additional emphasis. The Research Director may consult with the appropriate community-based groups, particularly the Division's NAC science subcommittee, and/or community-produced documentation, such as NRC decadal surveys and program assessment reports, to determine how and when to make adjustments.

Every four to five years, each Division R&A Program is assessed by an independent outside review committee, such as one set up by the NRC.

4.2.5.5 Performing Risk Management

NPR 7120.8 requires that a risk management approach be addressed in the Research Program Plan.

For a research portfolio, the objectives include the maximum progress toward SMD's research goals and objectives. A Research Program Manager must optimize the probability of success by including a suite of investigations in any research portfolio that include investigations expected to make important but foreseeable progress, as characterized by low risk, modest gain, with investigations that are not guaranteed to be successful but could result in substantial high-risk, high-payoff accomplishments toward science and technical goal. Multiple science pathways over the long term can mitigate science risk. Where appropriate, selection decisions should include the consideration for reducing future mission risk through appropriate investment in enabling knowledge and technology.

4.2.5.6 Closing or Transferring Research Activities

Research activities at each level of management are reviewed regularly to determine whether the research activities should be continued; the research including technology development has reached a point where the research activities should be transferred to a flight project; or the research should be terminated (KDP F).

4.2.5.6.1 Closing Research Investigations

The PI submits a final report following the completion of a research award's period of performance. It is expected that the PI will present the results of the NASA-funded research investigation to the science community and publish the results in the open literature. PIs of research contracts must also submit a Standard Form (SF)298 at the conclusion of the contract. The acceptance of this final report by the Program Officer completes the investigation (KDP Z).

4.2.5.6.2 Closing or Transferring Portfolio Research

The Division Research Director and research managers (Discipline Area Managers, Program Officers) use status reviews to determine whether a Discipline Area or program element should be continued for another year or discontinued. The SMD AA or Research Director may also call status reviews to determine the need to modify or end a Discipline Area. This occurs when the SMD AA authorizes transfer or closure of the Portfolio or program element (KDP F).

Status reviews are conducted as a component of the annual review of research program elements during the budget formulation process (summer) and the ROSES development process (fall).

4.2.6 Support Systems

SMD uses web-based systems to support the entire proposal and award cycle. They are the NASA-wide NSPIRES, the Government-wide proposal submission system called Grants.gov, and the SMD-unique RAPTOR.

4.2.6.1 NSPIRES

NSPIRES is an integrated system that SMD uses to solicit, receive, evaluate, and select proposals. NSPIRES is a NASA-wide system that is developed and managed by the NRESS contractor. SASPE is the SMD lead for managing SMD's interactions with both NRESS and NSPIRES.

The science, technology, and education research community uses NSPIRES (http://nspires.nasaprs.com/) to conduct business with NASA. NSPIRES supports the entire lifecycle of NASA research solicitation and awards, from the release of solicitation announcements through the peer review and selection process. NSPIRES was upgraded in late 2007 to support awards management.

NSPIRES has both external and internal users. External users are typically prospective proposers and peer reviewers. Internal users are SMD, NRESS, and other NASA program and award managers. In SMD, the principal internal users are Program Officers. SASPE approves SMD internal users.

The following NSPIRES modules support SMD activities:

- **Solicitation module.** Solicitations including ROSES, other NRAs, AOs, CANs, Requests for Information, and miscellaneous solicitations including NASA Earth and Space Science Fellowships, are posted on NSPIRES. Posting can include supporting documentation as well. When a solicitation is posted, a separate "response structure" is set up in NSPIRES for

every different proposal opportunity, (e.g., an AO typically has only a single response structure but ROSES has a response structure for every program element). Response structure parameters include the due dates and cover page settings.

- **Proposal module.** NOIs and proposals may be submitted to NASA through NSPIRES. An electronic proposal consists of an electronic form, often called the cover page, and one or more uploaded attachments. Electronic proposals are submitted by an authorized organizational representative (AOR), not by the PI; submission by the AOR is the electronic signature for the proposal. For paper proposals, the electronic form/cover page must be submitted through NSPIRES and then printed out, signed, and attached to every copy of the hardcopy proposal. NSPIRES can also ingest electronic proposals submitted through Grants.gov.
- **Peer Review Module.** Peer reviews may be organized using NSPIRES, including identification of reviewers, both panel reviewers and non-panel, mail-in reviewers, and assignment of proposals to reviewers. Reviewers can accept a non-disclosure agreement and self-certify themselves against conflicts-of-interest. Electronic proposals may be distributed to peer reviewers through a secure web interface in NSPIRES. Peer reviewers may submit individual evaluations through NSPIRES. NSPIRES may also be used to consolidate individual evaluations into a consensus evaluation and to approve the final consensus evaluation.
- **Award Module.** Electronic award packages may be assembled in NSPIRES. An award package, also called a TRP,, includes the proposal, the selection documentation, and any other documentation required to enable an award (grant) to be issued. Support offices like HGAO and NSSC may download award packages directly from NSPIRES, obviating the need to ship paper or email packages to GSFC or NSSC.

4.2.6.2 Grants.gov

Grants.gov (http://grants.gov/) supports the preparation and electronic submittal of proposals. Grants.gov was developed to handle proposals submitted to more than 1,000 competitive programs typically offered yearly by the 26 Federal grant-issuing agencies, including all of NASA's SMD NRA programs. Grants.gov is used only for solicitation and submission of proposals. Proposals submitted through Grants.gov are uploaded to NSPIRES for subsequent handling.

AOs are not posted on Grants.gov, and proposals submitted in response to AOs may not be submitted through Grants.gov. CANs may be posted on Grants.gov; a decision is made for each CAN. Some specific ROSES program elements are not posted on Grants.gov; these exceptions are limited to those program elements with special proposal submission requirements such as observing proposals for astrophysics guest observer programs.

4.2.6.3 RAPTOR

RAPTOR is used to help manage selected proposals and research awards. RAPTOR (http://raptor.hq.nasa.gov/raptor; also in ScienceWorks) is an SMD web-based tool for tracking approved investigations and specifying the award funding vehicles and amounts. It is also used to approve multi-year budgets and release funds annually.

RAPTOR has several classes of users. Program Officers may approve proposed funding for investigations and request funding for the award. Program Analysts may set annual budget targets and release funding for awards. NRESS task leads may export selected investigations from NSPIRES into RAPTOR. HGAO grant specialists may record funding actions (a future upgrade will give this capability to NSSC grant officers). Center personnel may generate RAPTOR reports and track approved investigations and research funding at their Center.

RAPTOR records a selected R&A proposal as an activity. Selected proposals result from a single grant, a single award other than a grant such as an RTOP, or multiple awards. RAPTOR records each award from a single proposal as a task within the RAPTOR activity.

Program Officers can use RAPTOR to:

- Approve activity budgets. After a proposal is selected, an activity is created in RAPTOR, and the Program Officer uses RAPTOR to approve the budget for each year of the activity. Activity budgets may not be approved that result in the portfolio budget target being exceeded in any given year.
- Request task funding. A task is created for each award being used to fund an activity; there might be only a single task. The Program Officer requests the funding for the task each year and identifies the WBS and the fiscal year to be used to fund the task.
- Request continuation funding. After a Program Officer approves the annual progress report for an award, RAPTOR indicates the approval and is used to request the funding for the next year.
- Record other Program Officer actions. Using Raptor, the Program Officer can initiate, grant augmentations, and PI institution transfers.

Program Analysts can use RAPTOR to:

- Set portfolio budgets. Based on the Division’s five year budget, the Program Analyst sets the portfolio budget target. As specified by the Program Officer and/or the Research Director.
- Release task funding. At least once every two weeks, the Program Analyst releases the funding that has been requested by the Program Officer. Only after the funding is released is it available for HGAO and others to generate grant and other award purchase requests.

RAPTOR is an evolving tool. New capabilities and new procedures are expected. Program Officers should make sure that they are using the latest procedures. This will minimize the likelihood of delays in processing award actions by HGAO and other support organizations.

4.2.7 Additional Topics

4.2.7.1 Working Groups and Science Definition Teams

SMD regularly uses a variety of standing working groups and specially constituted ad hoc review teams composed of working scientists and other experts external to the Program or Project to perform fact-finding related to the technical issues for its Programs. Since such groups are not chartered as advisory committees, they can only offer findings for NASA's consideration and not advice or recommendations. The outputs of a working group are technical findings and options for resolving program and project challenges, including pros and cons for the options, without giving advice or recommendations. A working group can also

provide comments/findings on technical requirements or conduct technical trade studies for the program or project.

Some SMD science disciplines use working groups to consider challenges facing a specific discipline and offer options for resolving those challenges. A project science working group provides technical findings for a project in development. A mission users group provides technical findings for a project in operation. Science (or Mission) Definition Teams provide guidance on research objectives to be pursued by NASA's research and technology programs or future science flight missions.

4.2.7.2 Graduate Student and Postdoctoral Fellowship Programs

SMD uses fellowships, grants, and other educational opportunities to promote workforce development at the undergraduate, graduate, and post-doctoral levels. The fellowships, grants, and educational opportunities are embedded in SMD research, technology, and flight projects. They are managed in accordance with program and project management life cycles as defined and described in NPR 7120.5, *NASA Program and Project Management Processes and Requirements*, and NPR 7120.8.

4.2.7.2.1 NASA Earth and Space Science Fellowship Program

SMD sponsors the NASA Earth and Space Science Fellowship (NESSF) program. NESSF is a graduate student fellowship program that supports the training of the next generation of scientists who may want to participate in NASA’s programs. The NESSF program announcement is made about November 1. Applications are due about February 1 for new fellowships and about March 15 for renewal fellowships.

In contrast with other NASA-sponsored graduate student research programs, foreign students may apply to NESSF if they are pursuing graduate degrees relevant to NASA’s Earth and space science programs at accredited U.S. universities (see NPR 5800.1, *The Grant and Cooperative Agreement Handbook*, Part 1260.12(c)(3)(iii)).

The SMD Education and Public Outreach Lead manages NESSF. SARA authorizes the release of the annual NESSF solicitation. The Selection Officials for the NESSF are the Division Directors or their designees.

4.2.7.2.2 NASA Postdoctoral Program

SMD manages the NASA Postdoctoral Program (NPP) through a technical officer assigned to the Science Support Office at Langley Research Center. NASA mission directorates, mission support offices, and NASA Centers wishing to sponsor postdoctoral fellows may place funding on the NPP contract for that purpose. Each sponsoring organization develops its own policies for selecting and managing postdoctoral fellows.

SPD-07, *Science Mission Directorate Integrated NASA Post-Doctoral Program (NPP) Plan*, provides uniform instructions to NASA Centers for SMD-sponsored NPP fellows. SARA manages SMD-sponsored NPP fellows at the NASA Centers.

4.2.7.3 Unsolicited Proposals

As required by NASA policy, SMD will consider unsolicited proposals for selection and award. NASA policy on unsolicited proposals is addressed in NFS 1815.6, Unsolicited Proposals, and NPR 5800.1, Section A, Part 1260.17. SMD policy and practices for handling unsolicited proposals is provided in SPD-04, *Handling Unsolicited Proposals*.

Proper handling of an unsolicited proposal includes:

- Initial screening. NASA is not obligated to review any unsolicited proposal if:
  - It does not propose an investigation that is relevant to SMD's strategic objectives;
  - It is not submitted by an authorized official of the proposing organization;
  - Its proposed budget is unaffordable; or
  - Its objectives are solicited in a current solicitation or a solicitation that is expected to be released in the near future.

If any of these conditions are true, the proposal may be returned under cover of a letter explaining the reasons for its non-acceptance for review.

- Logging. Unsolicited proposals must be logged in the SMD Unsolicited Proposal Log maintained by SASPE. The Program Officer must notify the proposer that the proposal is under review by NASA.
- Review. Proposal review can range from internal review for small proposals to multiple, external reviews for large proposals.
- Selection. The Division Director or designee is the Selection Official for unsolicited proposals. A Justification for Acceptance of an Unsolicited Proposal must be generated to justify the award of Federal funds.

Details and templates may be found in SPD-04, *Handling Unsolicited Proposals*.

4.2.7.4 Solicited but Noncompeted Proposals

There are occasions where a NASA discipline area manager or program officer may need to solicit a proposal other than through an openly competitive solicitation, e.g.:

- No proposals submitted in response to a solicitation address a critical NASA requirement.
- It can be demonstrated that only a single provider can respond to a requirement. This, however, is rare.
- Research infrastructure and support needs to be funded in parallel to and in support of the solicited research opportunities.

Under any of these circumstances, the Research Manager is responsible to justify such funding to the Division Director or designee. This process is detailed in SPD-04, *Handling Unsolicited Proposals*.

4.2.7.5 SMD Data Policy

SMD data policy addresses data from both SMD's R&A and flight programs.

4.2.7.5.1 Data from Research and Analysis Programs

NASA requires prompt public disclosure of the results of NASA-sponsored research. All data taken through NASA-sponsored research programs are considered public. This includes those data taken through SMD's research programs. NASA, therefore, expects significant findings from supported research to be promptly submitted for peer reviewed publication with authorship(s) that accurately reflects the contributions of those involved.

It is typical in research programs, unless specified otherwise, for the individual investigators to be allowed to maintain the control and archiving of data taken during the execution of the research investigation. NASA may require that any data obtained through an award be deposited in an appropriate public data archive as soon as possible after calibration and reduction. If this activity was not included in the selected proposal, NASA will negotiate with the organization for appropriate transfer of the data and, as necessary, may provide funds to convert the data into an easily used format using standard units.

Some SMD research programs require, as part of the solicitation, the archiving in a NASA or other public archive of data taken or generated through the SMD research program. In these cases, the proposed data-sharing plans will be evaluated as part of the grant review process.

In other cases, small amounts of data may be left in the PI's care. This may be the situation, for example, where there has been a theoretical or data-analysis investigation or a sounding-rocket, high-altitude balloon, airborne, or field-campaign investigation.

4.2.7.5.2 Data from Flight Programs

It is NASA policy that all data taken by NASA's space flight mission programs should be publicly archived as soon as they can be properly validated and calibrated. NASA's science AOs require that this activity be budgeted in proposals.

Unless otherwise specified, NASA no longer recognizes a proprietary period for exclusive use of any new scientific data that may be acquired through the execution of the award. All data collected through any of its funded programs are to be placed in the public domain at the earliest possible time following their validation and calibration. Exceptions are on a mission-by-mission basis.

Data preparation is expected to be accomplished within a few months from the time that NASA delivers the data to the investigation team. One exception are data that may be released almost immediately for public relations purposes.

4.3 MANAGEMENT OF OTHER (NON-R&A) RESEARCH PROGRAMS

This section is still to be developed. It will describe the process by which SMD formulates and implements R&T programs other than R&A.

5.0 FLIGHT PROGRAM MANAGEMENT AND ASSESSMENT

5.1 OVERVIEW

The Science Mission Directorate (SMD) follows NASA Policy Directive (NPD) 7120.4, *Program/Project Management* and NASA Procedural Requirements (NPR) 7120.5, *NASA Program and Project Management Processes and Requirements* for both program and flight project management, which for science missions are significantly different jobs. Project management addresses the daily functioning of a flight project. Program management addresses the broader perspective of a portfolio of projects needed to accomplish an overall strategic objective. Flight projects for SMD are initially developed as candidates for funding from multiple mission investigation concepts that derive from various surveys and studies performed by science advisory boards and panels. SMD arranges promising concepts into candidate programs as budget augmentation units, and submits them to the SMD Associate Administrator (AA) for potential funding as part of an upcoming President's budget. If successful, SMD writes a program Formulation Authorization Document (FAD), which marks entry into the Formulation sub-process. Formulation of the first project in the new program begins after SMD establishes the goals and commitments for the program.

Projects defined in the Formulation subprocess must pass through an Approval gate into Implementation. Formulation for a project consists of Phases A and B; Implementation consists of Phases C, D, and E; and the Evaluation subprocess provides for independent assessments of project status by teams external to the project at the phase transition points. The phased program/project approach is described in NPR 7120.5 Chapter 2 and diagrammed in **Figure 5-1**.

The SMD AA delegates flight program authority and responsibility through Division Directors (DD) to the Program Managers at the field centers. The DDs rely on the Program Executive (PE) at Headquarters (HQ) to track implementation of flight program responsibilities. The PEs work closely with the Program Scientist (PS) for science issues and the Program Analyst (PA) for budget issues. They also work with the Program Manager. In addition, there may be Program Directors appointed by the DD for oversight of specific, highly visible, programs, who will have one or more PEs under their guidance. The PE's responsibilities include program and project formulation, implementation monitoring, and performance assessment. The PE and Program Directors operate under the oversight of the Deputy AA for Programs (DAA/P).

The SMD manages the following six types of flight programs:

- Single-project programs (e.g., the Gamma-ray Large Area Space Telescope, James Webb Space Telescope, and Cassini)
- Multi-project, strategic, roadmap-initiated series (e.g., Mars Exploration, Living with a Star, Earth Systematic Missions, and Navigator)
- Multi-project, Announcement of Opportunity (AO)-initiated series (e.g., Discovery, Explorer, Earth System Science Path Finder, Mars Scouts, and New Frontiers)
- Multi-project, reimbursable spacecraft development for other U.S. Government agencies (e.g., Polar Operational Environmental Satellites (POES) and Geostationary Operational Environmental Satellites (GOES O-P))

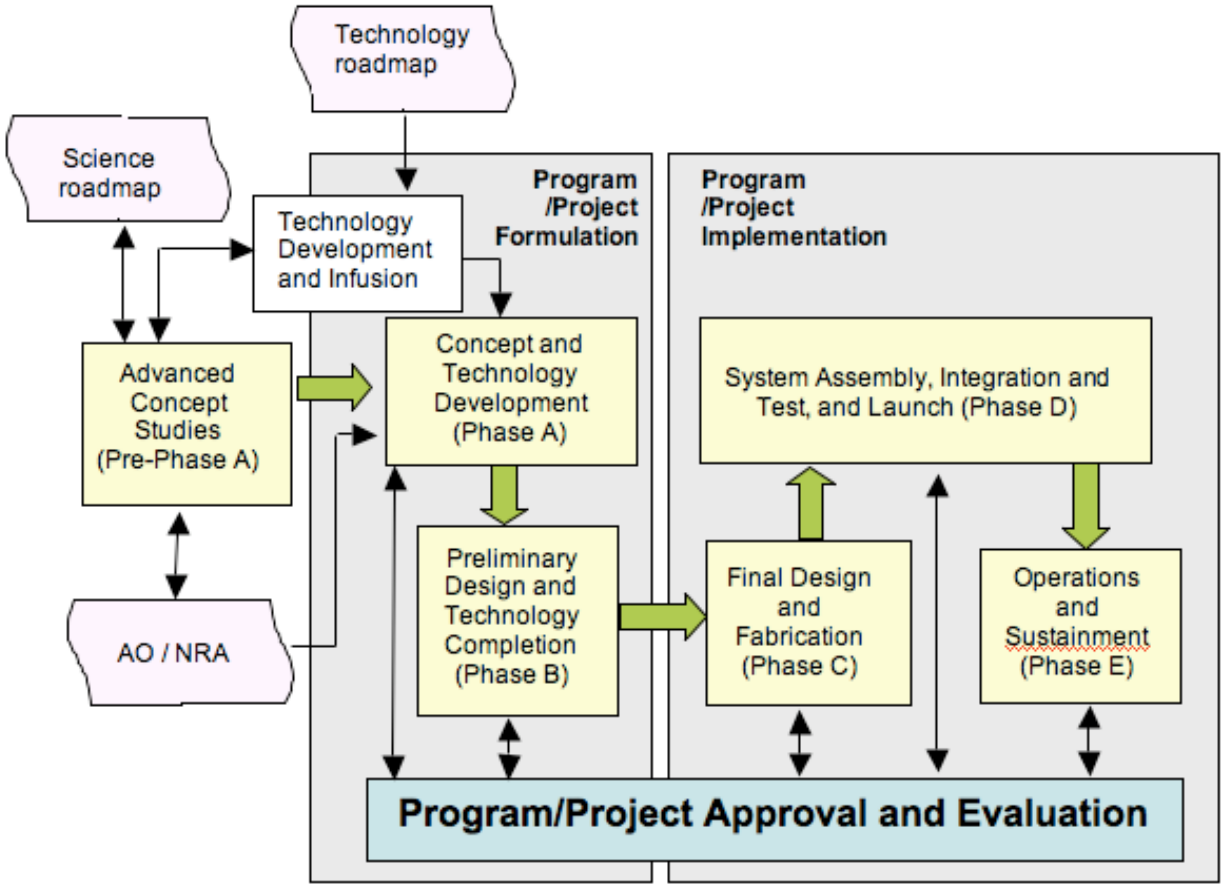

Figure 5-1. SMD Flight Program Management Process

- Instruments for non-NASA partner missions as Missions of Opportunity (e.g., Herschel, Rosetta, and Moon Mineralogy Mapper)
- Technology programs (e.g., New Millennium and In-Space Propulsion).

NPR 7120.5 categorizes multi-project programs in terms of the relative interdependency of their constituent projects, as:

- **Uncoupled.** Discovery is an example of an uncoupled program, in that the projects all stand alone.
- **Loosely coupled.** The Mars Program is one that can be considered loosely coupled, since its missions have interrelated objectives and may have interacting operations, such as an orbiter performing as a communications relay for a lander.
- **Tightly coupled.** The Hubble Space Telescope (HST) is an example of a tightly coupled program, in that its two projects, the HST Operations Project and the HST Servicing Project are fully dependent on each other for ultimate success.

In addition to flight projects, SMD manages some non-flight projects that conduct science observations and projects that archive and process returned science data, in support of flight projects.

Programs and projects must have clearly defined objectives consistent with NPD 1000.0, *NASA Strategic Management and Governance Handbook* and the NASA Science Plan (see Chapter 3, “Strategic Planning”). Programs and projects must have a comprehensive definition of cost, schedule, and technical commitments. These commitments and the associated agreements and acquisition strategy are controlled throughout the project lifecycle and are the principal focus of the Evaluation subprocess. They are documented in Program Commitment Agreements (PCA) and Program Plans.

Section 5.2, “Program/Project Management Responsibilities,” describes the roles and responsibilities of the principal programmatic positions. Activities prior to the Formulation subprocess are discussed in Section 5.3, “Pre-Formulation (Pre-Phase A).” Activities occurring in the Formulation, Approval, Implementation and Evaluation subprocesses are described in Sections 5.4, “Formulation Subprocess (Phases A and B),” Section 5.5, “Approval Subprocesses (Phase B to C Transition),” and Section 5.6, “Implementation Subprocess (Phases C, D, and E).” Sections 5.7 through 5.10 end this chapter with discussions of assessment and reporting, waivers, financial control, ground systems management, risk management, and mission termination.

5.2 PROGRAM/PROJECT MANAGEMENT ROLES AND RESPONSIBILITIES

NPR 7120.5 defines program/project management roles and responsibilities. SMD implements these through the processes described in this handbook. If there is a conflict, the NPR is the guiding document. However the NPR ascribes Directorate responsibilities only to the SMD AA and does not acknowledge the SMD AA's supporting organization, which actually implements the majority of the functions assigned to the SMD AA. The SMD Management Handbook clarifies these delegated responsibilities.

The SMD AA is responsible for providing strategic stewardship for the Agency’s Science Mission. The SMD AA manages program Formulation and delegates responsibilities according to NPD 1000.0 and NPR 7120.5. The SMD AA assigns portfolios of research and flight mission programs to DDs. For flight programs, the chain of authority passes from the Mission Directorate AA (MDAA) through the DD to the Program Manager at the field center. The Program Manager's role involves day-to-day oversight and management of formulation and implementation of the program and the projects within the program.

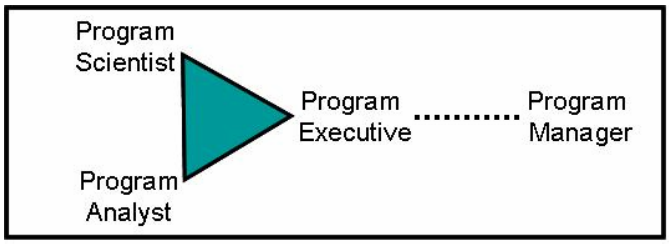

Figure 5-2. HQ’s Management Team for a Given Project

Three positions at Headquarters compose an SMD management team for each project: the PE, the PS, and the resource PA. Each is aware of major project decisions and is a key voter on options to resolve issues. They should always present a united interface to the assigned Center and its project managers. The PE interfaces with the Program Manager in the field on all programmatic issues concerning the program or its projects. **Figure 5-2** represents this relationship. The responsibilities of each of these four positions are detailed in Sections 5.2.1 through 5.2.4.

Table 5-1 is a three-page fold-out matrix derived from NPR 7120.5D Table 3-1. Table 5-1 illustrates SMD HQ staff roles and responsibilities for NASA program management. Where there are differences, Table 5-1 has been modified to address roles and responsibilities that are unique to SMD.

Table 5-1 and Table 3-1 similarities and differences are as follows:

- The row topics are the same as in the NPR.
- The two columns that represented the Center's Institutional and Technical Authority in the NPR matrix have been removed. These columns were omitted because their roles are not particularly relevant to this HQ-oriented document and they have been covered adequately in the NPR. They have been replaced with a column for the DD (and/or Program Director) and one for the PE-PS-PA management team.
- No changes were made in the first two columns, “Administrator and His Staff,” nor to the information in the last two columns, ”Program Manager and Project Manager,” since these are defined by the NPR.
- A couple of additions were made to the Program Manager column, as shown in italics, since SMD is allowed to impose additional requirements.
- Since the NPR assigns everything to the MDAA that belongs to the Mission Directorate, the NPR does not recognize the existence of the Divisions. Consequently, this table redistributes a small set of responsibilities from the third column into the Division columns.
- The table defines the split of programmatic responsibility between the PE and PM.
- The inclusion of the PS and PA recognizes that they are involved in some of the "programmatic" management activities in the table. In the PE/PS/PA column, specific tasks to be led by the PE or PS or PA are so indicated at the beginning of the line. If no such designation is present, the line applies to all three positions.

Table 5-1. Roles and Responsibilities Relationships Matrix

Office of the Administrator	Administrator Staff and Mission Support Offices	Mission Directorate Associate Administrator	Directorate's Science Divisions		Program Manager	Project Manager
			Division or Program Director	Program Executive, Scientist & Analyst **		
Strategic Planning						
▪ Establish Agency strategic priorities and direction ▪ Approve Agency Strategic Plan and programmatic architecture and top-level guidance ▪ Approve implementation plans developed by Mission Directorates.	▪ Develop Agency Strategic Plan (PA&E). ▪ Develop annual strategic planning guidance (PA&E) ▪ Develop Annual Performance Plan (PA&E)	▪ Support Agency strategic planning ▪ Develop directorate implementation plan *(Science Plan)* and cross-directorate architecture plans consistent with Agency strategic plans, architecture, and top- level guidance	▪ *Support Agency and Mission Directorate strategic planning and supporting studies* ▪ *Develop Science Division strategic plans that support the Directorate plans*	▪ *Collect information and generate supporting material for Division and Directorate strategic planning process* ▪ *Develop program strategic planning recommendations for division*	▪ Support Mission Directorate strategic implementation plan ▪ *Support HQ Science Division in developing MD strategic plan.*	
Program Initiation (Center Assignment and FAD)						
▪ Approve assignment of programs to Centers	▪ Approve Program Chief Engineers* (Technical Authority) (OCE)	▪ *Approve the FAD for new programs* ▪ Recommend assignment of programs to Centers ▪ Approve appointment of Program Managers	▪ *Provide resources to generate the FAD* ▪ *Recommend center assignment for program* ▪ *Review and concur in the appointment of program managers*	▪ *PE: Write the Program FAD for Division and Directorate approval* ▪ *PE: Draft program assignment letters for MDAA signature*	▪ Establish the program office and structure to direct/monitor projects within program	
Project Initiation (Center Assignment and FAD)						
▪ Approve assignment of Category 1 projects to Centers	▪ Approve Project Chief Engineers* (Technical Authority) appointment to Category 1 projects (OCE) ▪ Is notified of Project Chief Engineers* (Technical Authority) assigned to Category 2 and 3 projects (OCE)	▪ *Approves the FAD for new projects* ▪ Recommend assignment of Category 1 projects to Centers ▪ Assign Category 2 and 3 projects to Centers. ▪ Approve appointment of Category 1 and selected Category 2 Project Managers	▪ *Provide resources to generate the FAD* ▪ *Recommend center assignments for projects* ▪ *Review and concur in the appointment of project managers*	▪ *PE: Write the Project FAD for Division and Directorate approval* ▪ *PE: Draft project assignment letters for MDAA signature*	▪ Concur with appointment of Project Managers	▪ Establish the project office and structure to direct and monitor tasks/activities within project
Policy Development						
	▪ Establish Agency policies and ensure support infrastructure is in place for: Technical Authority (OCE), SMA functions (OSMA), Health and Medical functions (OCHMO) ▪ Develop and maintain Agency-wide engineering standards applicable to programs and projects (OCE)	▪ Establish Directorate policies (e.g. guidance, risk posture, and priorities for acquisition) applicable to program, projects, and supporting elements	▪ *Establish policies and procedures to ensure program and projects are managed consistent with sound management practices* ▪ *Ensure Division policies are consistent with Agency and Directorate policies*	▪ *PS: Review and recommend science policies to division director, such as for data management.*		
Program/Project Concept Studies						
	▪ Provide technical expertise for advanced concept studies, as required (OCE/NESC)	▪ Develop direction and guidance specific to concept studies for formulation of programs and non-competed projects ▪ *Approve Announcements of Opportunity (AO) and the policy and guidance they contain*	▪ *Develop direction and guidance specific to concept studies to support the division's strategic goals and science objectives* ▪ *Develop Announcements of Opportunity for competed projects to solicit proposals for concept studies*	▪ *PE & PS: Assist the development and documentation of direction and guidance for concept studies* ▪ *PS: Assemble the AO and supporting documentation (PE: Assist)* ▪ *PS: Orchestrate proposal processing.* ▪ *PS: Form SDT or STDT and provide guidance.* ▪ *Monitor and assess performance of projects in conducting the concept studies*	▪ Initiate, support, and conduct program-level concept studies consistent with direction and guidance from MDAA	▪ Initiate, support, and conduct project-level concept studies consistent with direction and guidance from program (or Center for competed projects)

Note: Changes from or additions to NPR 7120.5D are indicated in italics.
* - Centers may use an equivalent term for these positions, such as Program/Project Systems Engineer
** - Items without PE, PS or PA note apply to all three positions.

Office of the Administrator	Administrator Staff and Mission Support Offices	Mission Directorate Associate Administrator	Directorate's Science Divisions		Program Manager	Project Manager
			Division or Program Director	Program Executive, Scientist & Analyst **		
Development of Programmatic Requirements						
		▪ Establish, coordinate, and approve high-level program requirements *(Level 1)* ▪ Establish, coordinate, and approve high-level project requirements *(Level 1),* including success criteria	▪ *Ensure program and project requirements satisfy science division goals and objectives.* ▪ *Concur with requirements documents before going to MDAA for signature*	▪ *Coordinate the establishment of high-level program requirements and program-level requirements on the projects (Level 1) to include success criteria* ▪ *PE: Ensure quality of the documented reqmts (they are clear, complete, & testable as written)* ▪ *PS: Concur with documented requirements to ensure meeting SMD goals and priorities.*	▪ Originates requirements for the program consistent with the PCA ▪ Approve program requirements levied on the project (Level 1)	▪ Originates project requirements consistent with the Program Plan
Resources Management (Program Budgets)						
▪ Establish budgets for Mission Directorates and Mission Support Offices	▪ Manage and coordinate Agency annual budget submission (OCFO)	▪ Establish *overall* program and project budgets ▪ Allocate budget resources to Centers for assigned projects ▪ Conduct annual program and project budget submission reviews *with divisions*	▪ *Establish program and project budgets consistent with division allocations* ▪ *Support annual program and project budget submissions* ▪ *Allocate budget resources to Centers for assigned projects* ▪ *Conduct annual budget submission reviews with programs and projects*	▪ *Develop program and project budget profiles for annual budgeting process* ▪ *Participate in annual budget submission reviews with program office.* ▪ *Monitor project resource usage versus budget.* ▪ *PA: Maintain official SMD program and project budget files*	▪ Implement program consistent with budget ▪ Coordinate development of cost estimates to support budget ▪ Provide annual program budget submission input ▪ Manage program resources	▪ Develop mission options, conduct trades, and develop cost estimates to support budget. ▪ Implement project budget ▪ Provide annual project budget submission input ▪ Manage project resources
PCA						
▪ Approve Program Commitment Agreement (NASA AA)	▪ Concur with Program Commitment Agreement (OCE)	▪ Approve Program Commitment Agreement	▪ *Concur with Program Commitment Agreement before it goes to MDAA for signature*	▪ *PE: Develop Program Commitment Agreement*	▪ Support development of the Program Commitment Agreement	
Program Plans						
		▪ Approve Program Plans	▪ *Concur on Program Plans before they go to MDAA for signature*	▪ *PE: Support Program manager in development of Program Plan, especially on division policy matters, and interfaces with HQ functional offices* ▪ *PS & PA: Support as necessary*	▪ Develop and approve Program Plan ▪ Execute Program Plan	
Project Plans						
		▪ Approve Project Plans, if required	▪ *Review and concur on Project Plans*	▪ *Review Project Plans and provide assessment to Program Director, Division Director and MDAA, as requested*	▪ Approve Project Plans	▪ Develop and approve Project Plan ▪ Execute Project Plan
Program/Project Performance Assessment						
▪ Assess program and Category 1 project technical, schedule, and cost performance through Quarterly Status Reviews ▪ Conduct Agency PMC (NASA AA)	▪ Conduct special studies for the Administrator (PA&E)	▪ Assess program technical, schedule, and cost performance and take action, as appropriate, to mitigate risks ▪ Conduct Mission Directorate PMC	▪ *Assess program and project technical, schedule, and cost performance and take action, as appropriate, to mitigate risks* ▪ *Serve as a member of MD PMC* ▪ *Assess program manager performance and provide input to Center mgmt.*	▪ *PE & PA: Assess program and project technical, schedule, and cost performance and provide course correction recommendations to division and directorate management* ▪ *PS: Assess project status against top-level (level 1) science requirements & mission success criteria*	▪ Assess program and project technical, schedule, and cost performance and take action, as appropriate, to mitigate risks	▪ Assess project technical, schedule, and cost performance and take action, as appropriate, to mitigate risks

Note: Changes from or additions to NPR 7120.5D are indicated in italics.
* - Centers may use an equivalent term for these positions, such as Program/Project Systems Engineer
** - Items without PE, PS or PA note apply to all three positions.

Office of the Administrator	Administrator Staff and Mission Support Offices	Mission Directorate Associate Administrator	Directorate's Science Divisions		Program Manager	Project Manager
			Division or Program Director	Program Executive, Scientist & Analyst **		
Program/Project Performance Issues						
		▪ Communicate program and project performance issues and risks to Agency management and present plan for mitigation or recovery	▪ *Provide division support and guidance to programs and projects in resolving technical and programmatic issues and risks* ▪ *Communicate program and project technical performance and risks to Mission Directorate and Agency management and provide recommendations for recovery*	▪ *Assess program and project performance issues and risks and communicate them to division and directorate management* ▪ *Provide options and recommendations for recovery to division and directorate management* ▪ *Support Program & Project Managers in developing recovery plans.*	▪ Communicate program and project performance issues and risks to Center and Mission Directorate management and present recovery plans	▪ Communicate project performance, issues and risks to program, Center, and Mission Directorate management and present recovery plans
Termination Reviews						
▪ Determine and authorize termination of programs and Category 1 projects through Agency PMC		▪ Determine and authorize termination of programs and Category 2 and Category 3 projects through MD PMC and coordinate final decision with Administrator	▪ *Recommend project termination reviews* ▪ *Support Termination Reviews* ▪ *Examine budget options*	▪ *Perform supporting analysis to confirm termination is needed.* ▪ *Support Termination Reviews*	▪ Conduct program and project analyses to support Termination Reviews	▪ Support Termination Reviews
Independent Reviews						
▪ Authorize implementation of programs and Category 1 projects through PMC, based on NAR and other inputs	▪ Convene and support independent reviews for programs and Category 1 and 2 projects (PA&E) ▪ Provide SRB Review Manager for programs and Category 1 and 2 projects (PA&E) ▪ Provide cost and management system SRB members through the PDR/NAR (PA&E) ▪ Support independent reviews or technical assessments, as required (OCE/NESC)	▪ Convene and support independent reviews ▪ Conduct MD PMC to hear independent review report and to assess project readiness ▪ Approve chair, membership and ToR for SRB Independent reviews.	▪ *Assess program or project technical, schedule, and cost performance from independent review and take action, as appropriate, to mitigate risks* ▪ *Serve as a member of MD PMC* ▪ *Convene and support independent reviews, as necessary.* ▪ *Concur on chair, membership and ToR for SRB Independent reviews.*	▪ *Support independent reviews* ▪ *Assess program or project technical, schedule, and cost performance from independent review and recommend corrective actions to division and directorate* ▪ *PE & PS: Recommend independent reviews to division* ▪ *PE: Recommend or concur on chair, membership and ToR for SRB Independent reviews.*	▪ Prepare for and provide assessment of program and project readiness to enter Implementation ▪ *Convene and support independent reviews, as necessary.*	▪ Prepare for and provide assessment of project readiness to enter Implementation
KDPs (all)						
▪ Authorize program and Category 1 projects to proceed past KDPs (NASA AA)	▪	▪ Authorize program and Category 2 and 3 projects to proceed past KDPs (MDAA may delegate Category 3 project KDPs as documented in the Program Plan) ▪ Provide recommendation to NASA AA for program and Category 1 projects at KDPs	▪ *Perform supporting analysis to confirm readiness leading to KDPs for programs and Category 1, 2, and 3 projects* ▪ *Recommend project readiness to proceed past KDPs to MDAA*	▪ *Perform supporting analysis to confirm readiness leading to KDPs for programs and Category 1, 2, and 3 projects*	▪ Conduct readiness reviews leading to KDPs for program ▪ Conduct readiness reviews leading to KDPs for Category 1, 2, & 3 projects ▪ Certify program and project readiness to proceed past KDPs	▪ Conduct readiness reviews leading to KDPs for projects ▪ Certify readiness to proceed past KDPs
International and Intergovernmental Agreements						
	▪ Support the development and negotiate international and inter-governmental agreements (OER)	▪ Negotiate content of agreements with international and other external organizations	▪ *Negotiate content of agreements with international and other external organizations* ▪ *Recommend agreement content to MDAA*	▪ *PE: Coordinate technical content of agreements with the HQ Office of External Relations* ▪ *PE: Ensure proper routing of agreement documents through HQ functional offices and SMD*	▪ Support development of content of agreements with international and other government agencies	▪ Support development of content of agreements with international and other government agencies

Note: Changes from or additions to NPR 7120.5D are indicated in italics.
* - Centers may use an equivalent term for these positions, such as Program/Project Systems Engineer
** - Items without PE, PS or PA note apply to all three positions.

Office of the Administrator	Administrator Staff and Mission Support Offices	Mission Directorate Associate Administrator	Directorate's Science Divisions		Program Manager	Project Manager
			Division or Program Director	Program Executive, Scientist & Analyst **		
Launch Criteria for Nuclear and Human-Rated Missions						
▪ Approve launch request ▪ Forward request for nuclear launch approval to OSTP as required	▪ Validate, certify, and approve human rating and launch readiness to Administrator (OCE, OSMA, and OCHMO)	▪ Approve launch readiness	▪ *Validate launch readiness for division's programs and projects*	▪ *PE: Prepare launch approval documentation (NEPA matls, contingency plan, approval letters, etc)*	▪ Develop program launch readiness criteria	▪ Develop project launch readiness criteria

Note: Changes from or additions to NPR 7120.5D are indicated in italics.
* - Centers may use an equivalent term for these positions, such as Program/Project Systems Engineer
** - Items without PE, PS or PA note apply to all three positions.

Technology development projects, such as those in the New Millennium Program (NMP), do not have a science focus and therefore do not have a PS assigned during the project's development and operation. However, in these cases a program technologist may be involved and occupy the PS vertex of Figure 5-2's triangle. A PS may be assigned, if a technology mission is extended to perform a science objective after the primary technology mission has been completed.

Other responsibilities within SMD for programmatic management include:

- A Science Division Director leads all the Division's program and science activity and is the PEs and PSs' supervisor of record.
- A Program Director may be assigned. The Program Director reports to a DD and directs the activities of the Program Manager and several PEs for projects within the program. A Deputy DD fulfills this role if there is no identified Program Director. A Program Director exercises vested authority over the program and its projects, as delegated from the MDAA through the DD.
- For AO-selected missions, a Principal Investigator (PI) is given authority, as described in the AO, over the direction and conduct of the mission. The PI proposes these types of missions to focus on specific science objectives and assembles a pre-defined team of organizations to carry out the project. The PI reports programmatically to the Program Manager and scientifically to the MDAA.
- Senior PEs or PSs may coordinate the Division support for a program or a science discipline, and Division technologists may coordinate technology development activities.
- Senior PEs or PSs may coordinate the Division's Senior Review of operating missions to inform DD choices on mission extensions or terminations (see Section 5.10)
- The Deputy Associate Administrator for Programs (DAA/P) provides oversight for flight program management and enables coordination across the Divisions. The DAA/P also chairs the Directorate Program Management Council (PMC).
- The Office of the SMD Chief Scientist provides oversight for all SMD science activities, both that performed by flight projects and by research programs across the Divisions.
- The SMD Chief Engineer provides coordination and analysis of programmatic and engineering activities across the Divisions and provides the Technical Authority path for differing engineering viewpoints.
- NASA Center-based Program and Project Managers provide the direct management of SMD programs and projects.

Figure 5-3, "SMD Management Accountability," shows the lines of authority for SMD management accountability of programs and projects. Figure 5-3 also shows lines of programmatic coordination. In general, accountability is as follows:

- The SMD AA, as authorized by the NASA Administrator, delegates program and project authority, through the DAA/Programs, to a Science DD.
- Program direction flows from a DD through a HQ Program Director to the Program Manager at the Center and then to the Project Manager through the PI if it is an AO-initiated mission. The HQ Program Director may be the Deputy DD.

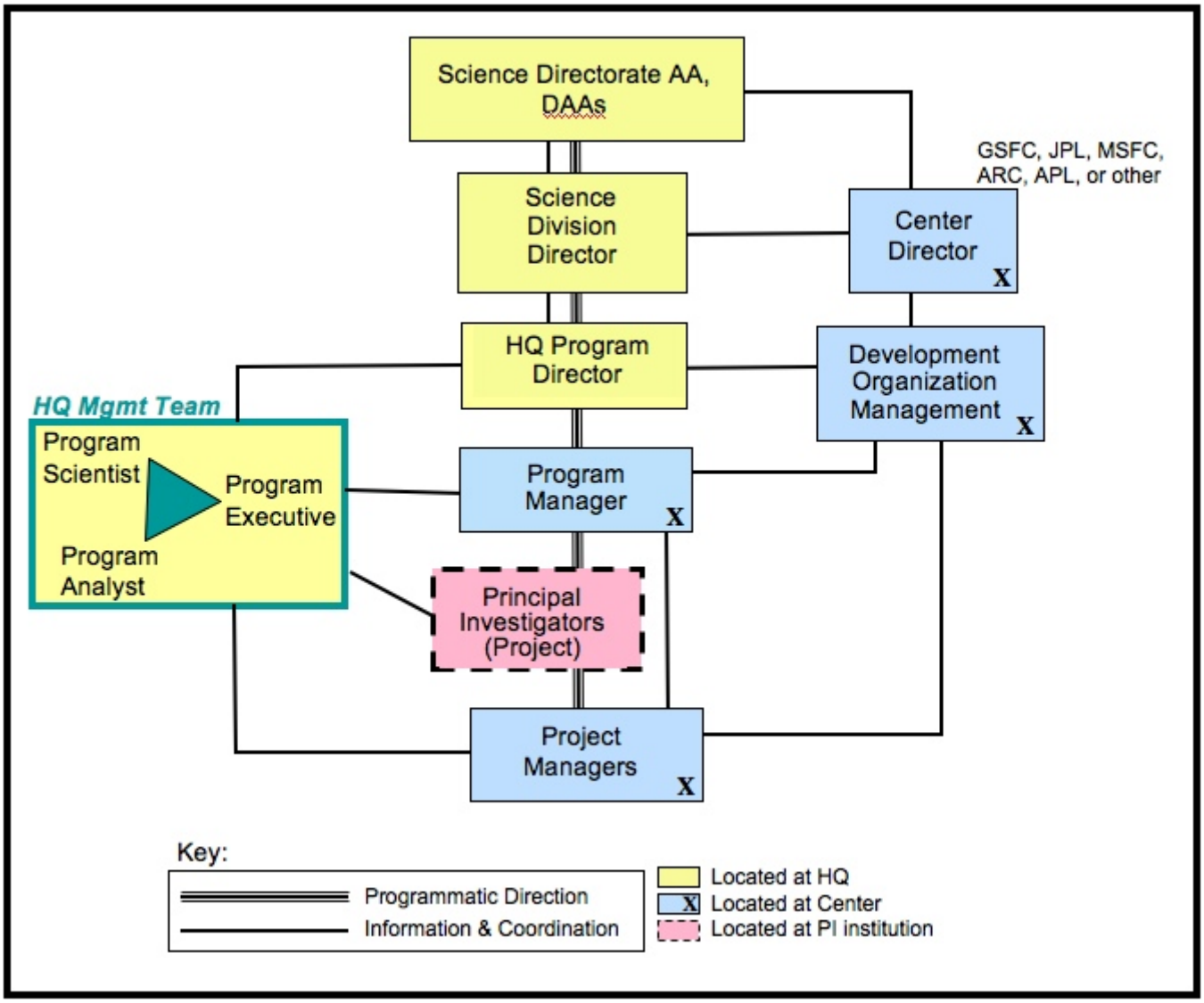

Figure 5-3. SMD Management Accountability

- The HQ PE, PS, PA management team maintains close contact with program and project personnel to keep abreast of project status. PEs and PSs are not in the direct line of authority but hold only as much authority as their DD or Program Director chooses to delegate.
- In general, a PI depends on the Project Manager for managing development activities, but the level of a PI's daily involvement varies widely. PEs and PSs communicate with the PI and the Project Manager. However, the PEs and PSs must ensure that the PI has the opportunity to make the project decisions he or she desires, within the boundaries of approved requirements, cost, and schedule.
- A Division or Program Director or the SMD AA signs letters of direction to projects. PEs and PSs draft these letters.

Decision councils also play a role in program and project management oversight and direction. This role is described in Section 2.4, "SMD Management Councils," In summary, SMD has a

Science Management Council (SMaC) and a PMC to review project proposals or project status and to recommend mission selection or confirmation to the next programmatic phase. Results from these are often reported up to the Agency PMC.

The following subsections expand on Table 5-1 for the roles of the key players in programmatic management in SMD, specifically for the Program Manager, the PE and the PS. They are grouped in the four areas of project initialization (pre-Phase A), formulation (Phases A and B), implementation (Phases C through E) and evaluation (or assessment).

5.2.1 Program Manager

The Program Manager is the senior program official at the implementing NASA Center and, according to NPD 1000.0, reports to the SMD AA at NASA Headquarters for all program-related activity. Since the SMD AA delegates day to day oversight to DDs, Program Managers actually report to the Division(s) with responsibility for their program. The Program Manager implements SMD policy and guidelines and interfaces with the PE and the Program Director on program cost, schedule and technical scope. More than one project manager may report to a Program Manager depending on the structure of a program. A single-project program may have a separate Project and Program Manager, or both roles may be invested in a combined Program/Project Manager. The Program Manager performs the following, or delegates this responsibility to a Project Manager:

INITIALIZES PROJECTS (PRE-PHASE A)

- Supports NASA HQ in conducting mission studies to develop mission concepts and determine feasibility.
- Supports NASA HQ in new project start approval activities.
- Develops launch vehicle requirements and launch windows identifying potential timeframes when launches can take place. The Project Manager also works with the PE to secure the correct launch dates on the launch vehicle manifests developed by the Space Operations Mission Directorate's (SOMD) Flight Planning Board.
- Develops project performance metrics in coordination with the NASA HQ PE.
- Conducts trade studies to develop a viable project architecture that will be approved by SMD. This involves conducting technical/cost/schedule tradeoffs.
- Ensures a Technology Plan is developed and executed in a timely fashion. This is done to ensure that all technology developments are completed before approval to enter Implementation is requested.

MANAGES FORMULATION (PHASE A, B)

- Supports NASA HQ in program planning, including recommending program objectives, program-level requirements, mission success criteria, implementation guidelines, and top-level budget and milestones.
- Supports NASA HQ in the preparation of domestic and/or foreign agreements such as Memoranda of Understanding (MOUs), Memoranda of Agreements (MOAs), and Letters of Agreement (LOAs) for collaboration.
- Develops working-level domestic/international agreements after HQ negotiates these top-level MOUs, MOAs, and LOAs.

- Negotiates inter-Center support agreements.
- Prepares Program Plans and approves Project Plans.
- Supports NASA HQ in the development of PCAs.
- Develops risk management plans, works with the PE and Project Managers to determine risk-mitigation strategies, determines single point of failure criteria, and develops/maintains program risk matrix charts.
- Develops and obtains appropriate approvals for the project-level documentation required to get ready for implementation (e.g., project plan, work breakdown structure (WBS), detailed budgets and schedules, make/buy decisions, statements of work, and requests for proposals).

IMPLEMENTS PROGRAMS AND PROJECTS (PHASE C, D, E)

- Meets program milestones on time, within cost, while satisfying program-level requirements and works with Project Manager to achieve project milestones.
- Allocates budget and staffing to elements of the program.
- Manages program/project contingency funds.
- Manages program/project risk according to risk management plan.
- Oversees the execution of the Program Plan.
- Controls program/project changes.
- Approves project plans and associated changes to these documents.
- Integrates the planning and execution of individual projects or programs composed of multiple, inter-dependent projects.
- Ensures compliance with applicable Federal law, regulation, executive order, and Agency directives.

ASSESSES PERFORMANCE

- Reviews and reports program/project performance to Science Division management in a timely way, meeting the guidance given by the DD.
- Provides support to Independent Review Board (IRB) activities.
- Provides Planning, Programming, Budgeting, and Execution (PPBE) budget responses.

5.2.2 Program Executive

The SMD AA designates individuals at NASA HQ to sponsor specific programs and projects. The SMD AA delegates responsibilities to the PE through the DDs. The PE serves as the DD's technical arm to keep track of programmatic activities and ensure the project is initiated and executed according to approved processes. The PE acts as the primary interface for the DD with the Program and Project Managers at the Center or other implementing organizations, maintaining a current knowledge of project status. Through this delegation, a PE has the following responsibilities:

INITIALIZES PROGRAMS AND PROJECTS (PRE-PHASE A)

- Tracks Directorate-initiated studies to define new missions and determine their feasibility and desirability (Section 5.3.1, "Advanced Concepts for Strategic Missions").

- Represents program interests on working groups having a charter to define classes of future missions and generate science implementation plans (Section 5.4.3, “Phase B Preliminary Design”).
- Establishes working groups to determine the advanced technologies necessary to enable future science missions.
- Maintains working relationships with NASA Center management, programs, and projects, as required to have a sound informational foundation for recommending programmatic actions.
- Provides liaison with SOMD’s launch-vehicle provider organization.
- Develops and maintains key peer-to-peer working relationships with established NASA partners in order to facilitate the negotiation of new working agreements for cooperative programs.
- Works with the Langley Research Center (LaRC) Science Support Office (SSO) and PSs as required during AO activities up through formal release. Typically this entails representing program management issues from the NASA HQ perspective, answering questions from proposing organizations, especially in the area of NASA HQ policy, representing NASA HQ at pre-proposal conferences, and helping to resolve policy issues (Section 5.3.2, “Pre-Formulation Concept Definition”).
- Works with the PS, the PA, the Program Manager, the Program Director, and the relevant DD to establish the budgetary cost cap guidelines.
- Identifies the need for environmental assessment or environmental impact and defines level of activity.
- Acts as a liaison between the project and the Office of External Affairs to initiate and achieve international agreements (Section 5.4.1.2, “External Agreements,” and Chapter 7, “Partnerships”).

DOCUMENTS FORMULATION (PHASE A, B)

- Writes the Formulation Authorization Document (FAD) for both new programs and new projects and negotiates approval (Section 5.3.5.1, “Formulation Authorization Document”).
- Drafts letters of assignment to selected Centers for program delegation for SMD AA approval (Section 5.3.5.2, “Program Delegation Letter”).
- Drafts Project Authorization Letters (PAL) for newly selected projects for SMD AA approval (Section 5.3.5.3, “Project Authorization Letter”).
- Develops plans for independent assessments, working with Independent Program Assessment Office (IPAO) for membership and terms of reference for SRBs, or for those chartered by the Directorate. (Section 5.4, “Formulation Subprocess (Phases A and B)”).
- Develops content for LOAs and MOUs for external partners and works with the Office of External Relations to formalize the agreements (Section 5.4.1.2, “External Agreements” and Chapter 7, “Partnerships”).
- Writes the PCA and negotiates the PCA’s approval (Sections 5.4.1.3, “Initiation of Program Commitment Documentation,” and 5.4.4.1, “Program Commitment Agreement”).
- Facilitates Program Manager development of the draft Program Plan (Section 5.4.4.2, “Program Plan”).

- Establishes formal program objectives, requirements, and metrics; prepares program-level requirements; and negotiates approval (Section 5.4.4.4, “Program-Level Requirements Appendix”).
- Ensures preparation of required National Environmental Planning Act (NEPA) documentation.
- Recommends the level of governing PMC for projects in accordance with NPR 7120.5 guidelines. (Section 2.4, “SMD Management Councils”).
- Recommends and reviews establishment of program and project budgets.

MONITORS IMPLEMENTATION (PHASE C, D, E)

- Monitors and reviews Center application of project budget and staffing.
- Monitors and reviews program/project development of baseline schedule.
- Monitors and reviews program/project management of risk.
- Reviews implementation of key agreements and contracts for launch services, spacecraft acquisition, science instruments, and other mission-critical items specific to a project.
- Provides planning and oversight of mission operations and data analysis (MO&DA) projects during the post-launch operational phases of science missions.
- Monitors and reviews program/project implementation of technical requirements.
- Participates in the budget process by reviewing Center PPBE submissions for applicable programs and projects. This is done in close coordination with the PA.

ASSESSES PERFORMANCE

- Assesses program performance against requirements, schedule, and budget, providing NASA HQ insight as required. He/she reports his/her assessment of program/project status to SMD senior staff regularly.
- Attends and reports on Center-initiated program status reviews.
- Attends and reports on selected project reviews, such as Mission Definition Reviews (MDRs), Systems Requirements Reviews (SRRs), Preliminary Design Reviews (PDRs), Critical Design Reviews (CDRs), and Mission Readiness Reviews (MRRs).
- Provides advocacy and program support within NASA HQ.
- Addresses issues requiring NASA HQ actions for resolution and facilitates NASA HQ actions as required.
- After gate reviews, consults with Center program management to determine necessary actions and decision requirements for NASA HQ and facilitates and monitors NASA HQ’s response.
- Provides an assessment of Jet Propulsion Laboratory (JPL) performance on JPL programs or projects as an input to the annual NASA Performance Evaluation of the JPL contract.
- Participates in lessons-learned forums.

5.2.3 Program Scientist

The PS is the senior NASA scientist responsible for a flight program or project’s science content to carry out an SMD science investigation. The PS is SMD’s interface with the Project Scientist or the PI for an AO-selected mission. The PS monitors science management and

program execution and ensures the science of the mission remains viable and true to strategic objectives during development of the mission. The PS is the steward of the Level-1 science requirements. The PS is a partner with the PE on decisions relevant to mission formulation, design, development, and oversight. The PS and PE maintain regular communication. Both participate fully in decisions and meetings relevant to mission planning, including those involving the implementing Centers. The PS responsibilities are as follows:

INITIATES PROJECTS (PRE-PHASE A, PHASE A)

- Establishes a Science Definition Team and produces relevant documentation.
- Assists the PE and the DD in the establishment of a Technology Definition Team, if relevant.
- Solicits scientific investigations for selection--supported by the PE, Program Manager, and Project Scientist--with attention to how the mission relates to previous and subsequent planned missions. The PS:
  - Writes and issues investigation AOs
  - Manages the proposal peer-review process
  - Develops the investigation-selection recommendation
  - Presents recommendation to the Selection Committee and to the SMD AA
  - Prepares the selection press release
  - Prepares acceptance and rejection letters
  - Debriefs proposers.

FORMULATES PROJECT ARCHITECTURE (PHASE B)

- Establishes program-level science requirements, with advice from Science Working Groups, and works with the PE to achieve their documentation. (see Section 4.2.7.1, “Working Groups and Science Definition Teams,” where appropriate).
- Develops and establishes scientific policies with advice from a Science Working Group, where appropriate.
- Develops science operations architecture.
- Works with the Project Scientist and Science Working Group to oversee development of the draft Project Data Management Plan.
- Works with the Project Scientist and Science Working Group to oversee development of a prioritized science de-scope plan.
- Works with the PE to review progress and results of Phase B studies and in developing and evaluating trades and options, such as de-scopes, that may influence the scientific capability of the mission.
- Administers changes in the program’s scientific content.

MONITORS IMPLEMENTATION (PHASE C, D)

- Works with PE and updates plans and program commitment documentation.
- Works with PE and monitor/reviews finalization of agreements.
- Works with PE and assesses program/project progress against program-level requirements, schedule, and budget.
- Oversees and monitors development of the plan for science implementation and science operations.

- Oversees and evaluates calibration/validation planning activities and preparations for environmental data records development.
- Monitors evolution of the project to ensure that scientific capabilities are maintained.
- Keeps NASA advisory bodies informed of progress and any capability trade studies being contemplated.
- Supports preparation of launch documentation.
- As launch approaches, briefs upper management on the project's scientific capabilities and briefs press and advocacy groups, playing a key role in education, public outreach, and public affairs.
- Participates in the final mission reviews prior to launch, to ensure that program-level science requirements will be satisfied and that the project is ready to enter the operations phase.

SUPPORTS SCIENCE MISSION OPERATIONS (PHASE E)

- Works with PE and assesses project performance against program-level requirements, schedule, and budget.
- Monitors science operations for instruments and data.
- Ensures proper data delivery and archiving, according to the approved Project Data Management Plan.
- Oversees development and issuance of solicitations for ongoing General Observer programs, data analysis programs, and other related science investigations.
- Organizes and conducts peer reviews of proposals received or oversees peer reviews when managed by a Science Center.
- Reports results and recommends selections to upper NASA management, specifically to the Selecting Official, unless a specific mission has a different designated selection process.
- Oversees development and issuance of solicitations through NASA Research Announcements (NRAs) for coordinated multi-instrument and multi-satellite observing programs, data analysis programs, other related science investigations, and interagency and international collaborations.
- Plays a key role in education, public outreach, and public affairs during science operations, including support for public affairs events such as NASA Science Updates.
- Participates in lessons-learned forums.

5.2.4 Program Analyst

The PA retains information on each project's New Obligation Authority and budget plan, oversees the annual PPBE process, and serves as the primary point of contact with the Office of Program Analysis and Evaluation to generate and maintain the Integrated Budget and Performance Document (IBPD) for Directorate programs.

They inform the PE and the PS on project budget matters. The PA, in the Management and Policy Division (MPD), should hold regular discussions with the PE and PS to ensure a consistent position when communicating with the Center project management. Section 8.3, "Performance Planning Process," describes the PA's responsibilities for these activities.

5.3 PRE-FORMULATION (PRE-PHASE A)

According to NPR 7120.5 the Formulation subprocess for a new program begins at the approval of a FAD; however, during Pre-Formulation (or Pre-Phase A) the PE and PS, with assistance from the PA, develop the content of a candidate program. In Pre-Formulation, the PE, PS, and PA introduce future program contents and their associated technology requirements into SMD strategic plans and budgets. The PE and PS support the Science DDs, scientists and technologists in the development of revised science mission implementation plans, colloquially called “roadmaps.” A similar process may be followed for new projects within an established program, if a roadmap is used to determine the program’s content rather than an AO. These projects also require a FAD to enter Formulation. See Chapter 3, “Strategic Planning,” for a discussion of roadmap development.

The PE, during Pre-Formulation, coordinates information and activities with Division Scientists and Technologists to ensure that the mission-specific technology necessary for the advanced concepts selected as part of the science mission roadmap is planned for development as required, or if not, raises a flag to the DD.

The PE, PS, and PA also support the Science Divisions in the grouping and advocacy of sets of mission concepts into new budget initiatives. Science workshops help to refine requirements and obtain science community advocacy. If successful, these concepts transition into new programs or projects. For Project Pre-Formulation, the PE supports advanced concept studies and promotes the maturation of advanced concept studies into mission concepts as supported by the work of Science and Technology Definition Teams (STDTs).

SMD also procures basic research investigations, including full missions, instruments only, or science teams using the AO process. The PS usually leads the AO preparation effort, with support from the PE and others. See Section 5.3.6, “Flight Project Solicitations,” for the use of AOs.

5.3.1 Advanced Concepts for Strategic Missions

Advanced concepts for strategically-developed future science investigations are derived from three distinct sources:

- Independently-funded publications in peer-reviewed journals and presentations at science conferences
- Results of NRAs for new mission concepts
- External studies performed under SMD direction, usually at a NASA Center.

Advanced concepts sometimes feed and sometimes stem from NRC decadal surveys and from science roadmapping activities (see Chapter 3, “Strategic Planning”). Multiple advanced mission concepts to support gathering and analysis of science data (i.e., a science investigation) may be developed independently for a narrow area of science. If the advanced concept studies are funded outside of the SMD funding authority, no PE or PS action is required, other than to remain cognizant of study results for synergy or to avoid duplication. If a Science Division determines to issue a NASA NRA for new mission concepts, the PE and PS work together to issue the NRA, and one of them will serve as the Contracting Officer's Technical Representative (COTR) for the resultant grants. The Science DDs and their PSs

select the winning proposals. The PE interacts with the NASA grants office to implement and extend the grants, and distributes the final reports to the PSs and Science DD. See Section 4.2.4, “Managing the Proposal Cycle” for more information.

If the NASA Administrator, the SMD AA, or a DD determines that a Center should develop an advanced concept, the PE prepares a letter of direction and a task statement and facilitates the funding of the task using funds indicated by the SMD AA or DD. The SMD AA or DD signs this letter. The Center then either performs the study in-house or issues an NRA and appoints the COTR.

Using results from concept studies, external teams from the science community meld various advanced concepts focused on specific areas of science investigation. From this, SMD conducts workshops where they develop a consensus concept that is used as input for science mission roadmaps.

5.3.2 Pre-Formulation Concept Definition

If a consensus concept arising from Advanced Concept Studies is accepted as a new mission in the science mission roadmap, the Science DD appoints the science participants for the STDT to develop the concept into a mission concept. The PS is generally responsible for organizing and managing STDT activities. If new technology is not necessary for a particular mission, then a smaller Science Definition Team may be formed. The PE, PS, Division Technologist, and the Centers involved in the science activity, support the STDTs with spacecraft concept studies, mission analysis, costing, engineering analysis, and technology support. The science advisory boards coordinate an STDT report with the science community that, as a minimum, contains the following information:

- Science objectives
- Identification of any required new technology
- An operations concept
- Mission design architectures
- A spacecraft concept
- Science instrument conceptual payload
- Cost, schedule, and their associated level of risk.

Several STDTs may update or further develop the mission concept before it becomes part of a program or before an AO for mission instruments is released. SMD usually dissolves STDTs before SMD issues an AO for mission instruments to ensure that an STDT is not viewed as giving one investigator a competitive advantage over another. Alternatively, when SMD uses an AO to acquires a complete mission, then some or all of the work done by STDTs may be performed by the proposer in a funded first phase (or Step 1) of a mission competition, leading to a down-select and eventually to mission confirmation.

During the period an AO is open, the PE and PS remain separated from the proposers to avoid the appearance of giving a competitive advantage for one investigator. The PE and PS should not answer individual questions from proposers or participate in the development of instrument proposals.

The PS and evaluation panels lead the proposal-evaluation activities. They are supported by the PE, the Program Manager if the project will be in an existing program, and others as needed. MPD provides LCCs and the results of their schedule analysis. MPD provides this support to ensure that the PS and evaluation panels understand the cost, schedule, and technical assumptions inherent in the selections for comparison later in the project. The PE and Program Manager also obtain critical information to assess the technology readiness of the instruments and identify what is needed to incorporate the instruments into the mission.

5.3.3 Technology Incorporation

Chapter 6, “Technology Program Management,” discusses the various types of technology efforts within SMD and how they are managed. Each SMD Science Division designates a person as a Division Technologist to represent the DD for technology requirements, priorities, policies, plans, and practices. The PE for a given project works with the DD, the PS for the mission, the Division Technologist, and the Program Manager to determine whether spacecraft and instrument technologies needed are sufficiently mature to transition the project into Formulation for Phase A at the time of instrument selection. If the technology is not sufficiently mature, the PE coordinates activities and information with the Program Manager to develop an integrated technical, cost, and schedule plan to move the technology to Formulation. Any additional technology development is treated as project-specific technology, and the associated costs are included in the total mission costs for the project. If the technology is sufficiently mature, the technology criteria for entry into Phase A are satisfied.

5.3.4 Initiation of New Programs

SMD proposes new programs as funding candidates when a Science DD can package a set of science investigations or technology capability requirements under a common set of goals and objectives. The PE, PS, and PA support the Science DD in developing the candidate science initiatives and lead the development of candidate technology initiatives for instruments or spacecraft coincident with the yearly development of the Agency's budget that transitions into the President's budget the following winter. The development of initiatives includes soliciting data on technical content, cost, and schedule for multiple possible initiatives from knowledgeable people outside of HQ, including, if possible, experts who are not part of the group proposing the initiative. The SMaC reviews candidate new science programs and makes appropriate recommendations to the SMD AA. The SMD AA reviews the recommendations and selects new initiatives for further study. For those initiatives selected, the PE supports the refinement of technical, cost, and schedule information. This is done based largely on HQ sources and on previously solicited input from sources outside HQ because selected new initiatives are usually embargoed within HQ.

If SMD reviews and approves the initiative, the initiative is presented at an Agency-level Acquisition Strategy Planning (ASP) meeting. The ASP provides the forum for senior Agency management to review major acquisitions before authorizing budget expenditures. This Agency-level review provides the approval to initiate the program after which a FAD is written for the new program. Subsequently, an Acquisition Strategy Meeting examines and approves the acquisition approach.

5.3.5 Transition to Formulation

Formulation authorization involves placing into a FAD the definition of a newly formed program or project, including objectives and how it supports the NASA Science Plan. SMD uses a Program Delegation Letter (PDL) or a Project Authorization Letter (PAL) to makes program or project assignments respectively to the designated implementing NASA Centers.

5.3.5.1 Formulation Authorization Document

The SMD AA authorizes the transition of a program from a new initiative into Formulation. The FAD documents this authorization. The PE drafts the FAD and documents the program's purpose, the terms of reference, the funding, and the participants. In the FAD, the PE traces the program's purpose back to the NASA Science Plan. A FAD is also required for a new project to begin Formulation, unless that project is for a mission initiated by a competitive AO. The authorization is independent of any particular design solution for science or technology and is stated in terms of functional capabilities. The FAD content must comply with NPR 7120.5, Appendix C. An example of a well written project FAD is given in Appendix C.1 to this handbook. Other examples can be found in the on-line Requirements Management System.

For programs that use the AO process to formulate new projects, a FAD is not needed since the AO defines the project's parameters. For such programs, SMD initiates several competitive Phase A studies in parallel. SMD documents the results in Concept Study Reports (CSRs) use in a subsequent down-select. SMD initiates each study by a letter of selection from the SMD AA to the PI, which is a type of PAL discussed in Section 5.3.5.3, "Project Authorization Letter."

For programs, the FAD is the authorizing and controlling document for the Formulation period. Later, once the PCA is approved and the program moves into Implementation, the FAD becomes a historical document and no longer needs to be updated. Likewise, for a strategic project that is authorized by a FAD, when the program level requirements (Level-1) are approved, and the project transitions to Implementation, the FAD is no longer maintained.

5.3.5.2 Program Delegation Letter

For a new program, the SMD AA sends a PDL, along with an approved FAD, to the designated NASA Center Director. The PDL assigns program responsibility and provides the Center Director authority to establish a Program Office. In response, the Center Director proposes a Program Manager for SMD AA approval. Once approved, the Program Manager prepares a Program Plan for the SMD AA's review and approval that describes how the Program Office proposes to manage and implement the program.

The PE drafts the PDL for the SMD AA's signature. The SMD AA gets the NASA Administrator's concurrence on the PDL before the SMD AA sends the letter to the implementing NASA Center. See Appendix C, "Sample Program-Level Documentation."

5.3.5.3 Project Authorization Letter

For a new project within an existing program, the SMD AA issues a PAL to the Program Manager, and to the Center Director at the host Center. The PAL authorizes Phase A (or Phase B for AO downselected missions) work on the new project to begin. The PAL contains

instructions to establish a Project Office, select a Project Manager, and work with the designated Science Division during Phase A to develop the Program-level requirements for the mission. The signed FAD accompanies this letter. The PE is responsible for drafting the PAL for the SMD AA's signature. See Appendix C.3 for a sample PAL. Note that for AO-initiated projects, the SMD AA's notification letter of mission selection from the SMD AA to the PI, and to the Center Director, becomes the PAL.

5.3.6 Flight Project Solicitations

SMD uses solicitations to identify and select complete missions, individual instruments or instrument suites, science team members, and other participants in or providers for specific SMD missions. For flight missions, SMD uses the AO to solicit science investigations that may involve the provision and operation of experiment hardware up to and including a complete mission from formulation through operation and data analysis. Among the many kinds of flight programs that it manages (see Section 5.1, "Overview"), SMD uses the AO to solicit a complete mission for multi-project, AO-initiated programs such as Discovery, Explorer, Earth System Science Pathfinder, Mars Scouts, and New Frontiers. For all other flight programs, the AO is commonly used to solicit investigations involving instruments and science team members.

The process of developing an AO and evaluating and selecting proposals is the same for both full missions or instruments for a strategic mission. Unless noted otherwise, the remainder of this section applies to all AOs, whether for a complete mission or for a more limited investigation.

Although the PS leads the AO process, the PE may take the lead for programs where there is no program-level PS. Although this chapter identifies the PS as leading the AO process, it is understood that the PE will carry out the responsibilities for programs where the PE is the AO lead. There are two major tasks to solicit flight investigations through AOs: developing the AO and AO evaluation, selection, and award process.

5.3.6.1 Developing the AO

First, the PS identifies and assembles an AO Executive Committee. The AO Executive Committee assists the PS in all aspects of the AO process. The AO Executive Committee should include those individuals that will play a role in both developing AO policy and conducting the AO evaluation and selection. This usually includes the PE; the Program Director; the Program Acquisition Manager from the LaRC SSO; appropriate Discipline Scientists or others who will manage peer review panels; and possibly the program or project manager, if this does not create a conflict of interest. The SMD lead for AOs, the Senior Advisor for Science Process and Ethics (SASPE), should be notified of the AO Executive Committee's establishment and membership. The AO Executive Committee identifies and resolves science and competition policy issues for the AO, collects draft language for a model AO, and researches all relevant policy directives that NASA and SMD have put in place for AOs. Input should be sought from multiple HQ sources including the Office of External Affairs, Office of Procurement, Office of General Counsel, Education and Public Outreach, Applications, and relevant Applications areas.

The plans for the AO, including all major AO policies and constraints, must be presented to the SMaC for approval (see Section 2.4, “SMD Management Councils”). Approval by the SMaC, co-chaired by the SMD AA, is authorization to proceed.

With the AO Executive Committee’s help, the PS develops a draft AO. The draft AO should be accompanied by a draft AO Evaluation Plan. Comments should be widely solicited internally on the draft AO until the draft is mature enough to be publicly released. The draft AO is distributed internally within SMD for comments and concurrence. It is distributed to other interested Directorates and Functional Offices for comments only. No concurrence is required from other Directorates and Functional Offices for the draft AO’s release. The PS revises the AO to incorporate comments received. While not absolutely required, it is good practice to release the draft AO for public comment. SMD concurrence through the SMD AA is required to approve public release of the draft AO. The minimum required concurrence for this public release is SASPE, responsible DD, SMD content area and policy leads, Chief Scientist, and MDAA.

The draft AO is posted for public comments in NSPIRES. Typically four weeks is allowed for responses. During the period of the posting, the PS receives public comments on the AO and revises the AO based on those comments. Contents and comments are considered procurement-sensitive from this point forward.

Concurrence on the final AO begins with the SASPE and the responsible Science DD, whose signatures provide authorization to proceed with routing the AO for approval. The PS routes the revised draft AO through the review cycle, first internal to SMD content area and policy leads, and then for comment and concurrence to external reviewers in Functional Offices including the offices of External Relations, Procurement, and General Counsel. Concurrence of the SMD Chief Engineer is necessary to verify compliance with NPR 7120.5. The PS incorporates appropriate comments received, prepares the final AO for release, and obtains approval from the SMD AA for the AO’s release.

The AO is synopsized in the Federal Business Opportunity or similar mechanism, and announced through the e-mailing list in NSPIRES. After the required waiting period, the AO is posted on the NASA research opportunities web site in NSPIRES.

5.3.6.2 AO Evaluation, Selection, and Award

The PS leads the AO evaluation and selection process. The PS:

- Finalizes the AO evaluation plan with the aid of the Program Acquisition Manager. He/she obtains approval of the plan from the Program Director and the SASPE.
- Performs a compliance check on all proposals and returns non-compliant proposals to the proposer without further evaluation.
- Plans and conducts a science peer review. An AO Executive Committee member manages each panel. The PS must ensure that conflict of interest rules are enforced during the review, and that proposals receive a competent and thorough evaluation. Conflict of Interest policies are given in SPD-01A, Handling Conflicts of Interest for Peer Reviews.
- Works with the Program Acquisition Manager to plan and conduct a technical, management, and cost (TMC) review, if required. The PS must ensure that conflict of interest rules are

enforced. See SPD-01A, Handling Conflicts of Interest for Peer Reviews, for conflict of interest policies.

- Coordinates an assessment of foreign participation in proposals with the Office of External Affairs.
- Plans and conducts the categorization of proposals. Upon the recommendation of the PS, the SAPSE appoints the Categorization Subcommittee in his/her role as Co-Chair of the AO Steering Committee. Membership may AO Executive Committee members. The Categorization Subcommittee categorizes proposals based on the final peer review evaluations from the science peer review and the TMC evaluation, if any.
- Arranges for and participates in a meeting of the AO Steering Committee to review the conduct of the AO evaluation process. The AO Steering Committee is co-chaired by the SMD Chief Scientist and the SASPE. The AO Steering Committee reviews the recommendation for selection and all supporting documentation. The AO Steering Committee Co-Chairs produce a set of findings for the Selection Board and the Selection Official.
- Presents recommendations to the Selection Official and the Selection Board. For AOs, the SMD AA is the selection official and the SMaC serves as the selection board. The SMaC executive secretary records the Selection Board's findings and the Selection Official's decision.
- Prepares the selection statement and supporting selection documents, including letters to proposers, letter to the implementing Center/organization, and the press release. The following individuals and offices must concur on the selection documents before the Selection Official signs them:
  - Program Scientist
  - Program Director
  - Science DD
  - Office of General Counsel
  - Office of Procurement
  - Office of External Relations (OER), if foreign participation is anticipated
  - The SMD front office.
- Coordinates post-selection activities with the office of Legislative and Intergovernmental Affairs, Public Affairs, External Relations, and Procurement. Post-selection activities include notification of the Administrator, selected proposers, and Congress; issuance of a press release; and notification of all proposers by e-mail and letter.
- Establishes and maintains a file of all quality records.
- Works with program and project managers to transfer responsibility for the selected investigations from HQ to the implementing organization.
- Conducts lessons-learned and other process improvement activities. These can include lessons-learned discussions with SMD colleagues and community workshops for improving or modifying the AO process.

The selected investigations transition to Phase A Formulation activities detailed in the next section. In some AO programs, including most complete mission AOs, multiple proposers are

selected for competitive Phase A activities. A downselect will occur at the end of Phase A with some confirmed to proceed to Phase B and others not.

5.4 FORMULATION SUBPROCESS (PHASES A AND B)

The Formulation subprocess refines mission concepts in order to define an affordable program or project and provides a plan to meet mission goals and objectives in the NASA Science Plan. This subprocess includes the following:

- Developing advanced concepts
- Conducting trade studies
- Defining technology development goals and undertaking its development
- Exploring implementation options
- Establishing internal management control functions
- Performing cost and performance analyses on concepts deemed to have a high degree of technical and operational feasibility
- Creating a preliminary mission and systems design
- Identifying reserves associated with program risk management and other estimated project reserves.

Independent review teams are established in Phase A for all programs and projects. See Section 5.7.1, “Program Executive Responsibilities for Evaluation,” for details as to how this is done.

5.4.1 Phase A Mission Requirements Definition

Phase A of Formulation defines mission and system concepts, parameters, constraints, and requirements that will allow the project to be developed on a schedule to meet established goals and within a realistic cost. This is done by conducting studies which examine the trade space permitted within identified constraints, and through continued development of enabling technology toward achieving an acceptable Technology Readiness Level (TRL). A prime focus is to identify the top-level requirements that the mission must satisfy in order to meet the science objectives. As the definition of the mission emerges from trade studies, it is important to determine, and continually adjust, the estimated cost of various components of the mission and the ultimate LCC. A Phase A goal is to have a consensus draft of the HQ-controlled, program-level requirements document ready by the SRR and to place this document under configuration control as a baseline early in Phase B. This applies to AO-initiated projects in competitive Phase A studies as well, although drafting the document usually cannot be done until Phase B is initiated, but should be a priority early in that phase, and based on requirements as proposed in the CSR.

5.4.1.1 Mission Studies

Phase A Mission Studies are initiated by issuing a PDL or PAL to a NASA Center, with a FAD attached. The Center is asked to respond with an implementation plan, which may be in the form of a draft Program or Project Plan as a product from the study. The PE and Program Manager review the Center's planned study activities and negotiate required changes. The PE requests that the Resources Management Division issue a NASA Form 506A budget authority.

Phase A studies for AO-initiated projects are begun by selection letter and instructions for preparing the CSR, which will form the basis for later down-select evaluations. The CSR provides the implementation plans for subsequent phases.

Phase A Mission Studies determine the feasibility and desirability of a suggested new project. They also define the mission requirements and constraints prior to seeking major new funding. In this definition of a specific mission, the following should be defined:

- Mission and science requirements
- Project constraints and boundaries
- Alternative design concepts
- Operations and logistics concepts
- Feasibility and risk analyses
- Advanced technology requirements
- Environmental impact requirements
- Identification of needed tools and models
- Formulation subprocess partner letters of agreement
- Detailed cost and schedule estimates
- Education and outreach possibilities.

These studies need to demonstrate that credible, feasible mission designs exist within allowed budgetary cost estimates. Phase A Mission Studies addressing new technology focus on technology development with a TRL of 5 or less. The phase ends with a successful MDR or its equivalent.

5.4.1.2 External Agreements

The great majority of SMD projects have some connection to another government agency or a foreign organization. If there is an exchange of work, information, hardware, software or funds for the project, external agreements are a necessity. Refer to Chapter 7, “Partnerships,” for a further discussion on the types and usage of external agreements. The following paragraphs summarize activities for the PE.

International Agreements – The defining and securing of approved international agreements for work performed in conjunction with foreign partners is critically important to a project. If technical discussions between the project and its foreign partners are required during the study phase, the PE must work with the Program Manager and the newly formed project during or before Phase A to define the content of a study phase LOA. The PE must also work with the OER to determine whether an LOA or an MOU will be needed, and to initiate and execute the activities necessary to generate these. MOUs and sometimes LOAs require approval by the U. S. State Department. An agreement in which there is an exchange of funds for services provided (e.g., for tracking services), known as a reimbursable agreement, requires coordination with and approval by the Office of the Chief Financial Officer. Foreign procurements using contract mechanisms are not treated as reimbursable agreements, as they are subject to different rules and generally would not need OER involvement. Early consultation with these Agency offices is essential.

After review with the Program Manager, the PE provides the technical agreement content to OER which drafts the formal LOAs, MOUs or reimbursable agreements. The mechanism for doing this is an entry into the web-based Science Pending International Agreements Database (SPIAD), a task database maintained by SMD and OER (see Section 5.8.1.4). An International Agreements Coordinator manages this database and the process for prioritizing development of agreements. The database assists coordination of work with the OER. OER signs LOAs, and the NASA Administrator signs MOUs.

Interagency Domestic Agreements – MOAs document partnerships with other agencies. MOAs are typically done for major collaborations or when there is significant reimbursement for a service performed. The PE must coordinate such activities with OER. The PE, with advice from relevant HQ support offices, including Office of the General Counsel, and support from the project, negotiates the collaborative agreement. No external approvals, such as from the State Department, are required for domestic agreements. The involved MDAAs and their functional equivalent in the partner organization sign the cooperative agreement. A reimbursable agreement requires coordination with and approval by the Chief Financial Officer. It is not always necessary to have a Formulation MOA done for domestic collaborations, unlike for foreign collaborations, because technology transfer and cross-waiver of liability are not issues. However, if it is a major collaboration, with significant contributions from the other agency needed for the successful implementation of the mission, a Formulation MOA is highly desirable to ensure both agencies are in early agreement on the collaboration. MOAs are to be drafted and prepared for signature by the time the project is ready to seek approval to enter Implementation.

5.4.1.3 Initiation of Program Commitment Documentation

During Phase A of Formulation, program-level requirements are determined and drafted for the program or project, as applicable. SMD levies program-level requirements on the program or project and its implementing organization. (SMD calls them Level-1, although this nomenclature is not consistent across NASA's directorates.) Program-level requirements on a multi-project program are usually focused on implementing overall program objectives and with the process of initiating and controlling projects within the program. Program-level requirements on projects, including single project programs, are focused on that project's objectives. SMD controls all of these requirements.

A project will use the HQ-controlled program-level requirements to generate lower level requirements for implementation. NASA HQ uses these requirements to evaluate the project's performance during Implementation. For single-project programs, these requirements are inserted into the Program Plan. Program-level requirements for a multi-project program are also documented in the body of the Program Plan. However, for new projects in multi-project programs, the requirements are attached to the Program Plan as a project-specific requirements appendix. The PE generates this material through coordination with the PS, the Program Manager, the PI and/or the Project Scientist, and project at the Center. Program-level requirements in either a Program Plan section or appendix, should be baselined under configuration control by the Science Division Director at the beginning of Phase B and signed off by the MDAA before Phase B ends. Documentation of the program-level requirements is a direct responsibility of the PE, even though the science requirements usually originate with the PS.

For new programs, the Program Plan and PCA are also started in Phase A, as described in Section 5.4.4, “Program Commitment Documentation.” The PCA contains the subset of the program-level requirements that define the commitment between the SMD AA and the Administrator. SMD considers these requirements as "Level-0" requirements. New projects begin their Project Plans in Phase A and finish them in Phase B.

5.4.1.4 Mission Definition Review

The MDR marks the end of Phase A and the beginning of the transition to Phase B, as defined by SP-6105, NASA Systems Engineering Handbook. (Various Centers performing science missions may refer to this review by different names.) The MDR obtains preliminary agreement on mission definition parameters. NPR 7123.1, NASA Systems Engineering Processes and Requirements, gives the mission definition entrance and exit criteria. For both flight and ground components, the MDR covers the preliminary requirements at both the program and the project levels, preliminary mission design, preliminary systems design with margins, procurement strategy, operations concept, significant risks and mitigation strategies, a preliminary schedule, and initial LCC estimates. This review, or its equivalent, must be successfully completed before a transition from Phase A to Phase B of Formulation. The Standing Review Board (SRB) will serve as the MDR review board and report findings at subsequent management reviews.

5.4.2 Phase A to B Transition

This transition involves independent reviews and approvals at multiple levels to ensure that the project is ready to proceed from Phase A to B. The PE coordinates the development of required Formulation documentation with the program and project managers. Through project assessments during Phase A, reviews of project documentation, and consultation with the Program Manager, the PE determines whether the project has completed the Phase A objectives, including any technology readiness demonstrations, and whether development objectives continue to be viable within the anticipated cost and schedule. If, through this analysis, it is determined that the project is not ready, the PE coordinates with the DD and PS to direct the project to continue further Phase A Formulation. If the project is ready, the process proceeds.

5.4.2.1 Transition Process for Strategic Projects

With a decision to proceed, the PE initiates and coordinates the Phase A-to-B confirmation process leading to Key Decision Point (KDP)-B. This process, illustrated in **Figure 5-4**, consists of either three or four steps:

1. A Preliminary Non-Advocate Review (PNAR) by an IRB, usually the SRB, which typically occurs during the MDR gate review.
2. A Center-organized Initial Confirmation Readiness Review for the Center Management Council (CMC).

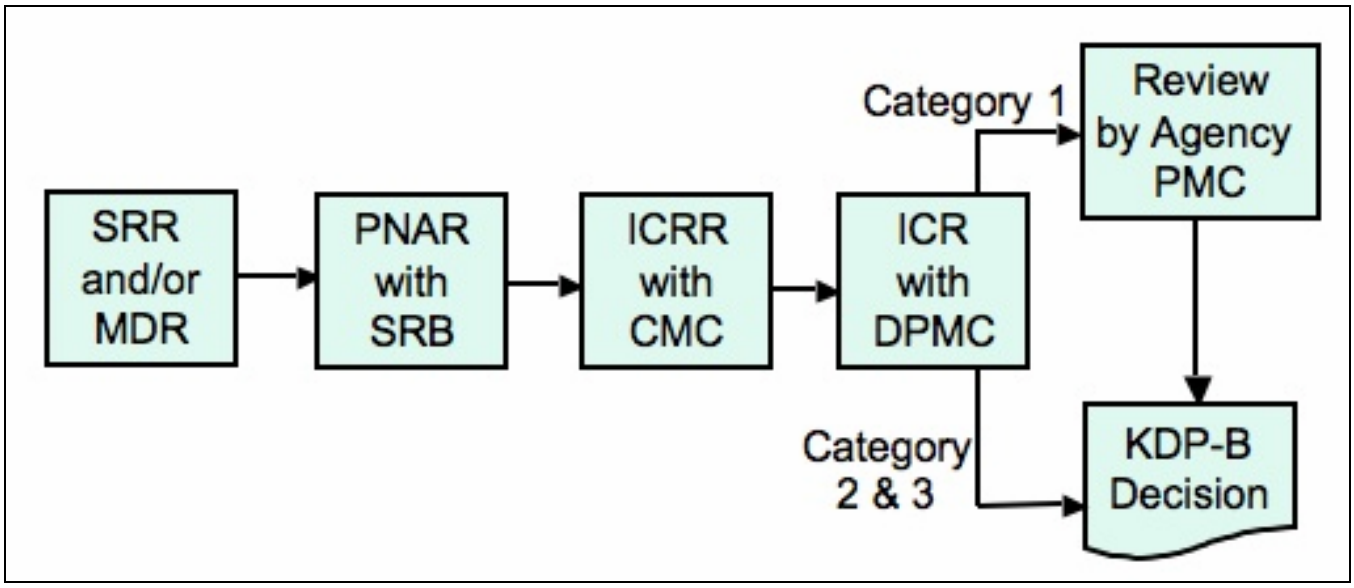

Figure 5-4. SMD Initial Confirmation Process for KDP-B

3. An ICR with the SMD PMC and subsequent confirmation by the SMD AA for Category-2 and -3 projects to enter Phase B (this is KDP-B), or for Category-1 projects, to proceed to the Agency PMC for approval to enter Phase B.
4. For Category-1 projects, an approval review before the Agency PMC which constitutes KDP-B for this category.

If an SRB has been established, the PE tasks the SRB for the independent PNAR. If not, the PE coordinates establishment of the assessment board and its review charter with the program and the project. For Category-1 projects, the governing PMC is the Agency PMC, the independent review team for the PNAR is the SRB established with the IPAO, and the Agency PMC meeting constitutes KDP-B. For Category-2 projects, the governing PMC is the SMD PMC and the independent review team is the SRB, and the SMD PMC constitutes KDP-B. For Category-3 projects, the governing PMC is the SMD PMC, unless delegated to a lower level by the SMD AA along with the KDP, and the independent review team may be an SRB or a separate assessment team. The PNAR board attends the MDR and holds discussions with the project, as necessary, to assess whether the project has completed the Phase-A objectives and is ready to proceed to Phase B. The board will present its findings to the project and then to the CMC at the CRR, the Directorate PMC (DPMC) at the ICR and, if necessary, to the Agency PMC. See Section 2.4 for a description of PMCs.

The PE schedules the ICR with the DPMC and ensures presenters can support it. If there are interagency or international partners, the PE, with assistance from the OER, coordinates the participation of the appropriate partner organization in the ICR. At the ICR itself, the chair of the PNAR presents the board's findings and recommendations. The project presents a project status summary, the results of the CRR, responses to the board's findings and the recommendations of the CMC. The recommendation of the Program Office is also presented. The DPMC hears the findings and recommendations and assesses the prospect of the mission being able to meet the science objectives on schedule and within budget. If the project is a Category-1 mission, the Council makes a recommendation to the SMD AA on whether or not

to proceed to the Agency PMC to seek approval to transition to Phase B. If the project is not a Category 1, the Council recommends acceptance, rejection or alternatives, and presents the results to the SMD AA, who is the approving official. With a positive decision by the SMD AA, (and the Agency PMC for Category-1 projects), and if all required documentation is complete, the project is confirmed to proceed to Phase B. Authorization to proceed is subsequently issued in a confirmation letter drafted by the PE for SMD AA signature. A “No Confirmation” decision by the SMD AA or lack of approval from the Agency PMC can direct the project back to the Center for further Phase A Formulation or it can terminate any further effort. If appropriate, partner agency input is considered in this decision process.

5.4.2.2 Transition Process for AO-initiated Projects

For new projects initiated using an AO process, the Phase A-to-B transition for KDP-B is a down-select from several competing Phase-A concept studies. In this case, there is no ICR or pre-NAR, but instead each parallel study result, as documented in the CSR, is subjected to critical evaluation by peer review teams. The evaluation teams present to the SMaC, rather than the DPMC, for a decision per Table 2-2 on which projects will continue into Phase B. Once chosen for continuation, the project enters Phase B, and a letter is sent to the PI and the implementing Center directing them into Phase B. The beginning of Phase B may be delayed pending completion of necessary documentation. In some cases, particularly if a specific technology is not quite ready, an AO mission may be selected for an extended Phase A, with the duration of the extension defined in the announcement letter from the AA. When this happens, the project must subsequently pass through the ICR/KDP-B process described above and be initially confirmed to enter Phase B just as if it were a strategic mission.

5.4.2.3 Cost Analysis Data Requirement (CADRe)

If the project is Category 1 or 2, a Cost Analysis Data Requirement (CADRe), developed according to NASA's Cost Estimating handbook, must be prepared by the project for the Program Analysis and Evaluation (PA&E) Office in the Office of the Administrator. If there is an established SRB, it generates the independent cost estimate (ICE) for the project based on the CADRe and presents it to the DPMC at the ICR. If the project is being reviewed as part of a down-select process for AO-initiated missions, the ICE is validated by an independent cost analysis based on the Phase-A CSR. The CADRe is provided to the PA&E Office upon mission selection.

5.4.2.4 Transition Point for New Technology

Phase A-to-B transition occurs in the middle of Formulation and is partially dependent on the TRL needed for project implementation. For projects with significant technology requirements, SMD prefers to have a longer Phase A to ensure technology readiness before a project enters Phase B. This reduces the overall risk to the project affecting cost, schedule, and technical performance inherent with unproven technologies.

At the time of the ICR, projects must demonstrate that no major outstanding technology readiness issues remain; otherwise, they will not receive approval to enter Phase B. This includes domestic and international collaborations where NASA is participating in a non-NASA led mission. Based upon Center and partner reviews, and if missions requiring enabling

technology have that technology at a TRL of 5 or higher, the project may enter Phase B. Projects may be given an extension to Phase A to work TRL issues if the budget permits.

This TRL restriction does not necessarily apply to technology flight demonstrations. Flight Validation projects, such as those of the New Millenium Program (NMP), may allow a different transition TRL than other projects because of their technology demonstration focus. Unlike science focused missions, technology demonstration missions may have technologies developed below TRL 5 during Phase B but must have all technologies at least to TRL 5 by the Phase B-to-C transition point (KDP-C). Because a NMP mission may be the validation of a technology in a relevant environment, unlike science projects, it may not have achieved TRL 6 by the time of KDP-C.

5.4.2.5 Programmatic Requirements for Phase A to B Transition

The following tasks are to be completed during Phase A before the start of Phase B can be approved. This serves as a checklist for this transition. While the PE is responsible for verifying their accomplishment, and reports their status toward completion at the ICR, most of these tasks are either performed by others or involve significant input from the PS, the relevant DD(s), the PA, the Program Manager and the project at the Center.

- Tasks led by PS with support from others:
  - Determine whether it is a PI or facility-class mission.
  - Issue an AO and select instruments, the PI and science teams.
  - Establish policies for forming the science teams and their participation.
  - Establish location and responsibility for the science data center.
  - Begin development of policy guidelines for data rights, access to data, and funding for Guest Observers
- Tasks led by PE with support from others:
  - For programs, develop preliminary program-level requirements for inclusion in the Program Plan.
  - For projects, develop a quality preliminary version of the Program-Level Requirements Appendix (PLRA) to the Program Plan, ensuring all required contents are addressed and requirements are clearly stated, unambiguous and verifiable.
  - Develop a plan for independent assessments during the project's life cycle, including initiating a project SRB, if applicable.
  - If a Category-1 project, work with IPAO to organize the SRB PNAR board, develop charter, ensure review is conducted and findings are presented to project, CMC, SMD PMC, and Agency PMC.
  - If a Category-2 or -3 project, either work with IPAO to organize the SRB or organize a Phase-B PNAR board, develop charter, ensure the review is conducted and findings are presented to the project, the CMC, and the SMD PMC.
  - Identify need for NEPA environmental assessment (EA) or environmental impact statement (EIS).
  - Determine content of study phase LOAs for non-NASA domestic and international partners and work with OER to write the agreement.

  - Establish and document understanding of collaborations with partners, as a basis for writing the MOUs and MOAs for non-NASA partners, domestic and international. This includes risk management strategies as defined in consultation with OER.
  - Ensure the JPL Phase-B task plan is written, if the project will be at JPL.
  - Develop a draft PCA, if for a new program.
- Tasks led by the Program Manager with support from others:
  - Establish preliminary budget target for project.
  - Develop performance metrics and reporting mechanisms for Phase B.
  - Ensure that all enabling technology required has reached a TRL of at least 5, except for Flight Validation projects.
  - Develop a draft Program Plan. This applies to single-project programs and to programs, where the first project is transitioning from Phase A to B.
- Tasks led by the Project under Program Manager oversight:
  - Develop estimates of LCCs for the mission. The LCCs should be developed through Phase E, including tracking and data archiving.
  - Complete Phase-A systems trades and optimization studies with appropriate documentation.
  - Develop a preliminary Operations Concept, to include mission-operations guidelines for flight, ground, and science data-collection and processing.
  - Identify telemetry, tracking, and commanding (TT&C) requirements and a usage strategy. Obtain an assessment from the intended provider of TT&C services (e.g., the Deep Space Network [DSN], Ground Network [GN], or Tracking and Data Relay Satellite System [TDRSS]) concerning the capacity and capability of the service to support the project's estimated needs.
  - If a Category-1 or -2 project, generate a CADRe and deliver to the PA&E Office at HQ at least 60 days prior to KDP-B.
  - Finalize launch vehicle performance requirements.
  - As necessary, develop draft preliminary NEPA EA or EIS reports.
  - Identify areas of anticipated risk and define risk mitigation strategies, including international partnership risks.
  - Develop an acquisition strategy, and obtain NASA HQ approval, if required.
  - Prepare contracts for issuance to start Phase B work.
  - Establish a document tree and WBS according to NPR 7120.5.
  - Develop a draft education and public outreach plan, in concert with program-level plans.
  - Develop a preliminary Export Control Plan per NPR 7120.5D para 4.4.2(c)(12). This should contain, as an appendix, a Technology Transfer Control Plan per NPR 2190.1, para 3.5.

5.4.3 Phase B Preliminary Design

Phase B of Formulation concentrates on applying results of mission studies and trades completed in Phase A to generate preliminary mission, instrument, and spacecraft designs that satisfy the identified constraints and requirements, and that will allow the mission to be developed on a schedule to meet established goals within a budgeted cost. It is a time to

finalize the requirements and establish the cost caps that will become firm requirements at KDP-C. Costs that should be detailed in Phase B, whether or not they are a part of the controlled cost cap, include the usual spacecraft development and test activities, and also launch vehicles, external reviews, full mission operations (including tracking requirements, space operations management costs and decommissioning costs), and data analysis, including data archiving and science center operations. Schedules are defined that allow mission and spacecraft development to meet an agreed-upon launch date with adequate margin. Risks are identified and risk mitigation plans developed. Science Division-controlled program-level requirements should be finalized and signed by the approving authorities during Phase B, well before the Confirmation Review (CR).

For missions with international or interagency collaborations, this is the time to quantify the contributions to the mission and assess the risks of that contribution not materializing or not arriving on schedule. Such contributions may include flight hardware, ground support equipment, launch vehicles, flight or ground software, calibration/validation activities, mission operations support, data analysis, or tracking support. Often these “no cost” (to NASA) contributions are key to accomplishing the mission; however since they are not tracked as costs to the project, they may not be considered until they become a problem. They need to be recognized as elements of risk, because contributed resources could disappear, placing overall mission success at risk. Appropriate risk mitigation strategies will need to be developed to ensure that international and interagency partnership risks are accounted for and mitigated during all phases, using NPR 8000.4, Risk Management, as a guide.

5.4.3.1 Project Reviews

A set of standard project reviews are called out in NPR 7120.5 and further detailed, with entrance and exit criteria, in NPR 7123.1. The SRR and PDR are two principal reviews leading up to KDP-C for SMD projects and are consistent with good engineering practice.

- An SRR evaluates the completeness, consistency, and achievability of mission, system, and subsystem requirements necessary to fulfill the mission objectives, and the traceability of the requirements flow-down. The SRR should occur no later than the beginning of Phase B and cover mission, project, science, operational, flight system and ground system requirements. Some projects may choose to combine the SRR with the MDR and hold them at the end of Phase A.
- PDR marks the end of Formulation Phase B and starts the transition process to Implementation Phase C. The PDR assesses the compliance of the preliminary design against the applicable requirements and evaluates the readiness of the project, system, subsystem or assembly to proceed with detailed design.

5.4.3.2 NASA HQ Policy Decisions/Actions during Phase B

A project performs many activities during Phase B leading to a mission preliminary design. These activities are covered by Center processes, and include those required by NPR 7120.5. This handbook is HQ-oriented and describes HQ personnel responsibilities during Phase B. The PE, working in close coordination with the PS and the Program Manager, should verify that the following key decisions are made and actions completed:

- Determine which of the program requirements should be placed into the PCA, to represent the “Level 0” set that will constitute the “commitment” between SMD and the Administrator. In some cases selected project requirements may also be placed in the PCA.
- Ensure completion of a detailed project cost estimate and an independent cost estimate and that those estimates are reconciled to achieve a thorough understanding of expected costs, cost assumptions and risks.
- Decide what mission cancellation criteria are to be placed into the Program Plan.
- Determine, in consultation with the Program and Project Managers, what technology can be used for the project, based on critical need, risk, TRL, and mission criticality. Determine whether the technology is mission enabling or mission enhancing.
- Decide, with OER, or other agencies as appropriate, on the type of the external agreement to pursue: LOA, MOU, or MOA and how many are required.
- Update the draft EA or EIS, as required.
- Initiate establishment of the ad-hoc Interagency Nuclear Safety Panel, if required.
- Determine if planetary-protection work is required.
- Work with SOMD’s the Expendable Launch Vehicle office to get the final launch vehicle selection process underway and the mission onto the manifest. This activity should be completed as early as possible to reduce the risk of mission design perturbations.
- Determine telemetry, command and tracking needs, (e.g., DSN, GN,TDRSS), independent or commercial ground stations, and work with SOMD to define requirements.
- Support the PS in developing data-archiving policies.
- Decide if risk mitigation plans are sufficient for the mission as planned, and if not, investigate actions to modify.
- Work with the Program Manager to decide if project education and outreach activity will be done at the project or program level and if cross-program activity will be supported.

5.4.3.3 Preparation for Approval (NAR/KDP-C)

The PE works with the Program Office and the project to organize and conduct the Confirmation Process for KDP-C, which is the SMD process for Approval of science projects to transition from Formulation to Implementation. The PE verifies that the necessary tasks and proper documentation has been accomplished during Phase B. In addition, the PA&E office requires an update to the CADRe document for Category-1 and -2 projects at KDP-C. From project reviews, project documentation, and consultation with the Program Manager, the PE assesses whether or not the project has completed the Formulation objectives to the point of readiness to begin detailed design and that development within the anticipated cost and schedule continues to be viable. If, through this analysis, and after consultation with the cognizant DD, PS, and Program Manager, the PE determines the project is not ready, he/she will recommend the project continue further formulation. With a decision that the project is ready to transition, the PE initiates and coordinates the approval activity. Approval for Implementation is discussed in Section 5.5, “Approval Subprocess (Phase B to C Transition).”

5.4.4 Program Commitment Documentation

Proper documentation is crucial for achieving Confirmation. Phase B of Formulation is the time the key program commitment documents are developed at both the program and project level, to achieve approval for Implementation:

- The PCA is the agreement between the NASA Administrator and the SMD AA that documents NASA's commitment to execute the program requirements within established constraints.
- The Program Plan is the agreement between the SMD AA, the Center Director, and the Program Manager that relays this commitment to the Program Manager and the participating NASA Centers. This plan contains the HQ-controlled program-level requirements on the program.
- The PLRA, an appendix to the Program Plan, contains the HQ-controlled program-level requirements on each project in multi-project programs.

These documents ensure that NASA HQ and supporting organizations understand the programmatic, technical, and management systems requirements and commit the necessary resources.

5.4.4.1 Program Commitment Agreement

According to NPR 7120.5, a baseline PCA is required during program Formulation. The PE develops the PCA with support from the Program Manager, if he/she has been appointed. The PE drafts the PCA when the first project in the program is in Phase A and finalizes the PCA when the first project nears the end of Formulation Phase B. PCA approval occurs during the program Approval subprocess which occurs simultaneously with approval for the first project in a multi-project program. A signed PCA is required for KDP-C approval of the first project for Implementation. PCAs are subject to annual revision, review, and revalidation as necessary. PCA content is defined in NPR 7120.5 Appendix D, "Program Commitment Agreement Template." The PE should address specifically the topics listed in Appendix D and avoid additional detail.

The PCA template requires technical, schedule, and cost commitments. Technical commitments are summary level-program requirements (effectively Level 0). For a single-project program, these may include such items as number and type of instruments or measurements, orbit, lifetime, and any special requirements associated with calls for proposals. The program requirements for a multiple-project program (e.g., a mission series such as Discovery) address the program, rather than the individual projects. The requirements may include items such as how often AOs are released, how new projects are managed, how they report, length of development time, and requirements for approval by the Confirmation process. The PCA is tailored to reflect the uniqueness of a program and identifies how standard management processes and requirements may be revised. For cost commitment, the PCA will provide the total cost cap for each known project but will not provide cost spreads by year. These are covered in other budget documents that are to be referenced from the PCA.

During early Formulation, the PE, in coordination with the PS, prepares the initial draft of the PCA from cost, schedule, and program objectives received from the implementing Center. The IPBD, budget material prepared annually by the Centers, and the program-level requirements,

if written, provide reference material for the PCA. The PE coordinates a review of the draft PCA among key elements within SMD (e.g., the PS, the PA, DD[s], the SMD Chief Engineer and others as appropriate for the content of the specific PCA). With input from the program office and the project, the PE modifies the PCA and ensures its format satisfies the requirements specified in NPR 7120.5, Appendix D. The PE then submits the coordinated draft PCA to the Office of the Chief Engineer (OCE), which reviews it and responds with any comments and requests for revision. This step will be greatly expedited if the document contains the annotated concurrence of the SMD Chief Engineer before being sent to OCE. The draft PCA is circulated among other offices as appropriate.

As the program (or first project) approaches the approval milestone, the PCA is updated as an input to the NAR process. This final PCA is submitted for approval by the SMD AA, concurrence by the OCE, and signature by the NASA Associate Administrator. Annual review of the PCA, with updates as necessary, is required after the President's budget is released in the spring of each year. NPR 7120.5 requires updates to the PCA if the program content changes (i.e., a new project) or if there are significant overall program budget changes.

5.4.4.2 Program Plan

A Program Plan is prepared during the program's Formulation subprocess, and must be signed in order for the program to receive both SMD and Agency PMC approval to proceed to Implementation. The Program Manager develops the Program Plan, with support from the PE, particularly to develop and include program-level requirements. The Program Manager develops the Program Plan with content as identified in NPR 7120.5, Appendix E, "Program Plan Template." The Program Manager should circulate various Program Plan drafts among the stakeholders for comment, and after completion of the final draft, he or she obtains the appropriate signatures at the managing Center and submits the plan to the PE, who then obtains Science Division and SMD front office staff concurrences and the SMD AA's approval.

The Program Manager incorporates the HQ-controlled program-level requirements (Level 1) into the draft Program Plan. Program-level requirements on single-project programs and on mission series programs belong in the body of the Program Plan, while program-level requirements on the projects in a mission series are placed in appendices. Thus, a single-project program has a Program Plan containing SMD's Level-1 requirements on the program/project. A multi-project program has a Program Plan with a section specifying the overall requirements on the program (in addition to sections providing general program policies), and a separate PLRA for each project containing that project's Level-1 requirements.

The requirements in the Program Plan or PLRA serve as the basis for project assessments conducted by SMD officials during the development period, and provides the baseline for the determination of the science mission-success following the completion of the operational phase. The Program Office has the overall responsibility for meeting the mission, science, cost and schedule requirements and constraints contained in the Program Plan or PLRA. The Program Manager delegates to specific Project Managers all or part of this responsibility.

The Program Plan or PLRA identifies, either explicitly or by reference, any NPR 7120.5 requirement or process which the project/program does not plan to implement or is substantially modifying. Approval of waivers to NPR 7120.5 is obtained through a process managed by the OCE as described in Section 5.9, "Program/Project Waivers." Approved

waivers to NPR 7120.5 requirements are further documented in Project Plans and lower-level documents. Program-level waivers of NPR 7120.5 requirements are not necessarily repeated in the PLRAs.

5.4.4.3 Stewardship of Level-1 Requirements

The PS is the steward of the science Level-1 requirements for both the program and the project. Working with project scientists and PIs, the PS is responsible to ensure the science requirements document the unambiguous, minimum set of requirements that, when satisfied, will achieve the mission's intended science goals and objectives. The PE determines the non-science level 1 requirements to be specified. Together, the PS and PE document the program-level requirements, so that they are clear and unambiguous, do not overlap or conflict, and are testable and verifiable. These Level-1 requirements should describe what performance must be accomplished, not how it is to be accomplished. The PE and PS negotiate these requirements with their DDs, personnel at relevant NASA HQ offices, the Program Manager, and the Project Manager. Others involved may include the project scientist, the implementing organization (Center or other) management, PI(s), the SMD Chief Scientist, SMD policy analyst, non-NASA partners, and the NASA HQ launch-vehicle provider organization. The requirements must be carefully coordinated with all stakeholders such that these top-level requirements are well understood and are clear and specific enough to allow flow down to lower-level project requirements and subsequent traceability between levels. Negotiations are complete when an informal consensus is reached on the content of these program-level requirements.

5.4.4.4 Program-Level Requirements Appendix

The PE documents in a draft PLRA to the existing Program Plan negotiated program-level requirements for a new project in an existing multi-project program. While the PE may request assistance from the Program Manager and Center project in producing this document, the PE is ultimately responsible for the PLRA, since it is a NASA HQ-controlled document. The Science DD places the PLRA under configuration control at the beginning of Phase B, satisfying the KDP-B requirement from NPR 7120.5 for strategic missions to establish a "baseline." For AO-initiated projects, PEs and PSs work with the PI to convert requirements from the winning Phase A CSR into a PLRA as soon as Phase B begins, after which the Science DD places it under configuration control. During Phase B, after the PE and the Program and Project Managers agree on the PLRA's content, the Program Manager obtains the appropriate signatures at the NASA Center and other relevant organizations, and submits the appendix to the PE. The PE then obtains HQ concurrences and approvals. The PLRA should be approved as soon as possible during Phase B by the same signatories who approve the Program Plan, since the PLRA is an extension of that Plan. These signatories are the SMD AA, the Center Director and the Program Manager. Other interested parties may sign a separate concurrence page, as required by the MDAA, such that all agree to the set of requirements. These interested parties include the PI, PE, PS, DDs, Project Manager, DAA/Programs and SMD Chief Engineer The necessary signatures and concurrences must be obtained well in advance of the beginning of the Confirmation Process. See Appendix C.4 for a template that can be used to build a PLRA.

The PLRA, or requirements section in the single-project Program Plan, identifies the mission, science, and programmatic requirements as well as constraints, including funding and

schedule, imposed on the project. NPR 7120.5 specifies that both baseline and threshold requirements are to be described. Baseline science requirements are the mission performance requirements necessary to achieve the full science objectives of the mission. Threshold science requirements are those mission performance requirements necessary to achieve the minimum science acceptable for the investment.

The PLRA covers project-unique policies and specifies requirements and constraints on science data collection, mission and spacecraft performance, prime mission lifetime, budget, schedule, launch vehicle, and any other requirements or constraints that need to be HQ-controlled. The PLRA identifies the responsible implementing organization for project development and operation and designates the governing PMC. It discusses the risk management approach and process (including tools such as Failure Modes and Effects Analysis, Fault Tree analysis, and Probabilistic Risk Assessments, as appropriate), and the use of descope plans. It also identifies the criteria to be used to evaluate whether a project should be called for a termination review if it appears it might fail to meet its requirements. In terms of requirements, the emphasis in the Program Plan for multi-project programs is on requirements levied on the overall program. The PLRA emphasizes the mission-unique requirements and does not repeat the requirements in the Program Plan.

A key element of risk management is the definition of mission success criteria. Mission success criteria are a subset of the HQ-controlled program-level requirements that define what must be successfully achieved to satisfy the strategic plan objectives addressed by the program, project, or technology demonstration. Mission success criteria are performance requirements. While other requirements may define how to build an instrument (e.g., specify wavelength range), mission success criteria specify how the instrument must perform in collecting the data. These criteria are established during Formulation to drive requirements, define allowable trade space, and guide risk and safety decisions. Mission success criteria should be clearly identified as the portion of the program-level science requirements that, when met, will fully satisfy all baseline program objectives.

5.4.4.5 Updates to Program Plan and Appendices

Approved Program Plans and PLRAs are under strict configuration control. They are reviewed annually to determine if a change is needed to respond to approved changes to the baseline, but changes to requirements after the MDAA's approval signature should be rare. If necessary and recommended by the applicable DD, modifications are made in a change-controlled revision to the Program Plan or PLRA. Approval of the changes requires approval by the same three signatories that approved the original Program Plan. This is usually preceded by a DPMC meeting to evaluate the proposed changes, but small changes can be submitted as document change paper through the same signature path.

5.4.5 Formulation Checklist

During the Formulation subprocess, specific project information and decisions are developed and documented in preparation for KDP-C. Some products are generated by projects at Centers and provided to HQ for review and concurrence or approval, as appropriate, but all need to be addressed for successful approval to enter Implementation. The PE is responsible for verifying these are all accomplished and for reporting at CR on their status. These required products are identified in **Table 5-2** in the form of a Formulation Checklist for the Phase B to C transition, which is KDP-C:

Table 5-2. Formulation Checklist for KDP-C

☐	1.	Proposed PCA for a new program, ready for signature, or proposed updates to an approved PCA, for a new project, showing the project's cost baseline and top-level schedule milestones.
☐	2.	Signed Program Plan containing program requirements, for a new program, or a valid existing Program Plan covering a new project.
☐	3.	Signed PLRA, containing program-level requirements, for a new project in a multi-project program, including measurement requirements, success criteria, and cost and schedule targets.
☐	4.	Approved Project Plan for project seeking entry into Phase C of Implementation.
☐	5.	Science instruments selected and PIs and Co-Investigators identified.
☐	6.	De-scope plans for implementation in the event of cost, schedule or technical difficulties. See Section 5.8.2, "Budget Control, Descoping, and Cancellation."
☐	7.	Written and agreed upon performance metrics for Phases C/D/E, including defined cancellation review criteria. See Section 5.8.2.
☐	8.	Agreement between the Program Manager, Project Manager and the NASA HQ PE on program reporting method, content, and frequency during Implementation.
☐	9.	Plan for independent reviews during Implementation.
☐	10.	Results from an accomplished NAR, available for presentation at the meetings leading up to and including the KDP-C Review/Approval meeting.
☐	11.	Approved Technology Development Plan, which includes identification of required enabling technology and a verification of its maturation to TRL 6 or beyond (except for NMP).
☐	12.	Signed or final drafts of Implementation LOAs with other NASA and non-NASA organizations whose support is required to achieve program objectives.
☐	13.	Final drafts of any proposed MOU or MOA with domestic and international partners.
☐	14.	Determination of launch vehicle needed for the mission. Launch vehicle requirements for NASA or non-NASA Expendable Launch Vehicles (ELV), including for secondary payloads, should be fully defined in the project requirements documentation. SMD should be ready to provide to SOMD an Approval To Proceed for ELV acquisition after the CR.
☐	15.	An agreement between the project and the provider of the selected tracking service (e.g., DSN, GN) stating the project's tracking requirements and provider's capability to provide the required service. This agreement should specify costs to the project for providing the needed service including any engineering upgrades that the provider must make in order to meet project requirements.
☐	16.	Notice of Intent for environmental impact. Evidence that the environmental assessment process (and planetary protection), if required, has begun.
☐	17.	Draft NEPA compliance documentation. See Section 5.6.2, "Launch Preparation and Support."
☐	18.	Draft schedule for Nuclear Launch Safety Approval, if required. See Section 5.6.2.
☐	19.	Draft Orbital Debris Assessment report.
☐	20.	Approved acquisition plan for major project components.
☐	21.	Risk Management Plan, documenting a thorough assessment of technical, cost, and schedule risks.
☐	22.	Draft Project Data Management Plan, including data-archiving and data-rights policies. See Section 4.2.7.5.2, "Data from Flight Programs."
☐	23.	Draft plan for a Science Data Center, if applicable.
☐	24.	Final Mission Operations Concept document.
☐	25.	Defined budget for Mission Operations and Data Analysis (MO&DA), agreed upon by the PS and DD. For AO-selected missions this budget is an element of the overall mission total cost cap.
☐	26.	Project-level education and public outreach plan to be approved by NASA HQ.
☐	27.	A list of proposed waivers to NPR 7120.5, for approval by the governing PMC, documented in the form specified in NPR 7120.5D, Section 3.6, "Waiver Approval Authority."
☐	28.	Final set of Project Control Plans in accordance with NPR 7120.5 Table 4-4, to include the Export Control Plan with a Technology Transfer Control Plan appendix.

5.5 APPROVAL SUBPROCESS (PHASE B TO C TRANSITION)

The Approval subprocess determines whether a program or project is ready to proceed from Formulation to Implementation, through KDP-C, and supports its transition if it is ready. For a project, the details of the subprocess vary depending upon the project category. Some of the reviews mentioned below are considered part of the Evaluation subprocess (see Section 5.7, “Evaluation Subprocess”), but are also included here to clarify the approval flow. The Phase B-to-C approval activity consists of a process analogous to the Phase A-to-B confirmation process for KDP-B, described in Section 5.4.2, “Phase A to B Transition.”

The core of the Approval subprocess within SMD is called Confirmation, a term used by SMD to reflect SMD's approval to go forward. For projects where the SMD PMC is governing, the Confirmation Review (CR) is actually the gate for the approval KDP-C. For programs and Category-1 projects, (and selected Category-2 projects) the CR is followed by an Agency PMC meeting, which becomes the KDP-C gate. Thus, the governing PMC always conducts the KDP meeting. This approval process is summarized by **Figure 5-5**, “Approval Process for SMD Programs and Projects.”

The Phase B-to-C transition consists of either three or four steps:

1. A NAR by an IRB, usually the SRB, and typically conducted in conjunction with the project PDR.
2. A Center-organized CRR for the CMC.

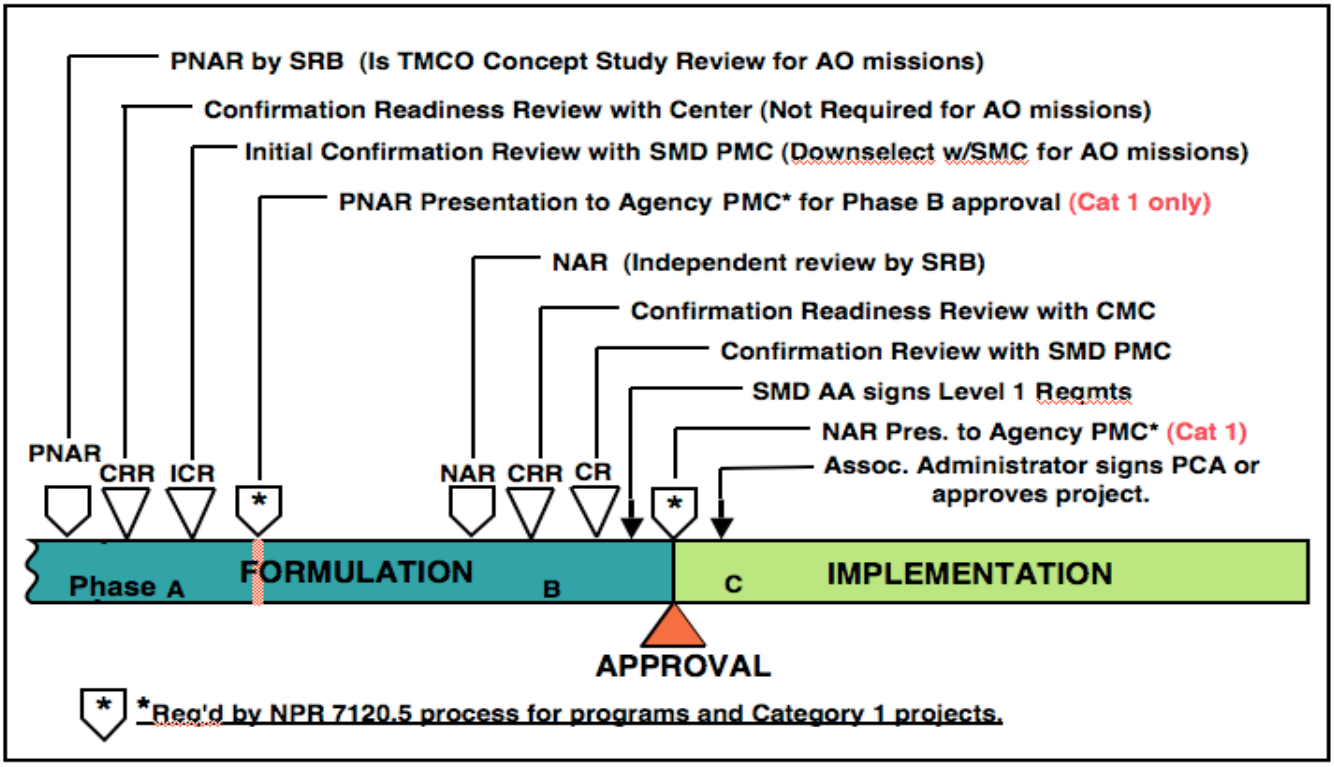

Figure 5-5. Approval Process for SMD Programs and Projects

3. A CR with the SMD PMC and subsequent confirmation by the SMD AA for Category-2 and -3 projects to enter Phase C (this is KDP-C), or for Category-1 projects to proceed to the Agency PMC for approval to enter Phase C (Implementation).
4. For Category-1 projects, an approval review before the Agency PMC which constitutes KDP-C for this category.

The following paragraphs describe this process for both projects and for programs.

5.5.1 Project Approval

During Formulation, project teams plan normal design and programmatic reviews to allow the implementing Center or organization to judge project readiness for Implementation. The reviews typically involve a technical design readiness aspect addressed in a PDR and programmatic readiness addressed in a CRR. The CRR considers the results of the PDR technical design assessment while also addressing cost, schedule, risk, and risk management. An SRB is established for the project according to NPR 7120.5, consisting of members appropriate to the subjects to be reviewed, but with no direct association to the project. The board chair, charter and membership of this Board are approved by the SMD AA, the Center Director, IPAO, and the Technical Authority in accordance with NPR 7120.5.

All projects require an independent assessment, in the form of a Non-Advocate Review (NAR), as a prerequisite to the CR and KDP-C. The SRB, which reviews the project at the PDR, usually conducts this review as well. In rare cases, SMD may use the LaRC SSO, an IPAO-initiated Independent Review Team, or other organization to field a NAR team, depending on the project category. If there is no existing SRB, the PE coordinates establishment of a board and its review charter with the project. An effort is made to conduct the NAR with minimal impact to project activity flow. The SRB attends the PDR to complete the NAR, holding additional discussions with the project as necessary. It assess whether the project has completed Formulation objectives.

After the NAR's completion, the SRB Chairperson presents preliminary findings to the project for correction of any misinterpretations of the data collected, and then to the CMC as an element of the CRR. As the findings are modified and finalized, the SRB Chair should communicate changes to the Project Manager, Program Manager and the PE. After the CRR, the CMC decides if the Center supports the project seeking confirmation, and whether to recommend implementation. If the CMC does not recommend transition to Implementation, Center management will contact SMD management to request that the project remain in Formulation to address whatever deficiencies were identified as the rationale for not proceeding to Implementation. If SMD agrees, the confirmation process is postponed.

Before the CR, the PE provides to SMD senior management the proposed project's PLRA to the Program Plan, containing the NASA HQ-controlled requirements. (Note: This document should be signed by all required parties, including concurrences, before the CR; however in some cases, the SMD AA may have not yet approved it prior to the CR.) Also, pre-Confirmation briefings to the SMD Deputy AA for Programs (DAA/Programs) by the project and the NAR Chair are held, if requested. All the items in Section 5.4.5, "Formulation Checklist," should be completed before the approval meeting, and the PE should be prepared to discuss the status of these items at the meeting. The SMD AA, as approval authority, will not confirm the project to proceed without a signed Program Plan and/or PLRA and a PCA either signed or

ready to sign. The status of any of the other items on the checklist is subject to examination for completeness. If not complete, approval may be denied or may be conditional.

If the CMC recommends that the project proceed to Implementation, the CR is scheduled with the SMD PMC. The PE coordinates activities to convene the CR once the directorate is notified that the project has had a successful CRR at the Center. At the CR:

- The Project Manager and/or PI provides a brief project summary, including the science the project is expected to accomplish and the current project status.
- The Project Manager addresses high-level risks and mitigation plans, descope plans, and mission success criteria.
- The chairperson of the NAR team presents its findings and recommendations.
- The Project Manager provides a response to the review team's findings.
- A representative of Center management presents the CRR's results and the Center's recommendations.
- The Program Manager provides the Program Office assessment and recommendations.

With this input, the SMD PMC assesses the mission's prospect of being able to meet the science objectives on schedule and within budget and makes a recommendation to the SMD AA. The SMD AA decides whether to authorize project transition to Implementation, if Category 2 or 3, or to allow the project to proceed to the Agency PMC for final approval, if Category 1. With the SMD AA's "confirm" decision to proceed, the SMD AA signs the PLRA if and if there are no outstanding items in the PLRA and if the PLRA has not already been approved.

For Category-1 projects and selected Category-2 projects at the request of the Agency PMC, the PE, with concurrence of the DAA/Programs and the Program Manager, works with the IPAO to schedule the Agency PMC to review and approve the project to enter Implementation. The PE will try and schedule the Agency PMC for as soon as possible after the CR. At the Agency PMC meeting, the Project Manager presents a summary of the project, including a summary of the CRR results. A summary of the Risk Management Plan, including a descope plan, is presented. The SRB Chairperson conveys the NAR's results and findings. The project responds to the NAR findings, and SMD management makes its recommendation to the PMC. If the PMC recommends transition to Implementation, this recommendation goes forward to the NASA Associate Administrator. If the transition is for a project within an existing program, the Agency PMC may also expect an updated PCA including the new project, which would then go to the NASA Associate Administrator to sign.

After a successful approval, the PE works with program and project personnel to close all actions and recommendations from the CR and/or Agency PMC as soon as possible. Some action closeouts may be required before the project receives approval to begin Implementation Phase C. The PE should also work with the Project and Program Office and with the SMD-embedded Office of Public Affairs representative to issue a press release for start of Implementation whenever the approval letter is sent to the PI and the project. The MPD is notified to release the corresponding funding to the project in accordance with the approved budget plan. If there are outstanding items in any documentation, such should be resolved and then presented to the SMD AA in a subsequent meeting. Confirmation may be withheld until this is accomplished or may be conditionally granted. Implementation funding to the project

may also be withheld until such issues are resolved. Documents baselined under configuration control at this time include the PLRA, the Project Plan, the Risk Management Plan, baseline cost including such things as the WBS and Cost Basis of Estimate. The PE and PS are expected to know and follow governing principles of configuration management and ensure the projects do also.

A “no confirmation” decision by the SMD AA at the CR or a non-approval from the Agency PMC can direct the project back to the Center for further Formulation, or it can terminate any further effort. This decision is documented in a letter drafted by the PE for SMD AA signature. Changes in budget or in strategic plan criteria used to assess the project, or changes within the program or project that violate the original approval criteria, could necessitate reformulation and reevaluation for re-baselining or cancellation. The project returns to the Formulation subprocess, addressing whatever deficiencies are identified as the rationale for not proceeding to Implementation. If cancellation is the chosen option, the PE should ensure that all appropriate stakeholders are notified and that the appropriate lessons learned are captured in an archive such as the on-line Lessons-Learned Information System, managed by Goddard Space Flight Center, and that other PEs are notified and can inform their projects.

5.5.2 Program Approval

The process for program approval varies somewhat depending on the type of program. Single-project programs and tightly coupled programs will, in nearly all cases, follow the project approval process defined above in Section 5.5.1, with the addition of the necessity to complete the program-level documentation in addition to the project documents. For multi-project uncoupled and loosely-coupled programs, the program is generally approved for Implementation at the same time as the first project in the program, so that a CR and an Agency PMC meeting would have both a program component and a project component. While it is theoretically possible for the program to be approved and the project not to be approved, this situation is unlikely. However, while the NASA Associate Administrator can approve a new project, a new program requires specific approval of the NASA Administrator.

This activity leads to a decision whether a new program is ready to proceed from Formulation to Implementation, and if so, then secure the NASA Administrator’s approval for its implementation. In addition to the program having accomplished the necessary activity to justify a transition in mission phase, a PCA and Program Plan are required for each new program. The proposed PCA needs to be pre-coordinated with the OCE to ensure consistency on content and format. The Program Manager writes the Program Plan and the Center Director and the SMD AA approve it, with prerequisite concurrences as they require. Both the Center Director and the MDAA will require concurrence signatures from members of their own staff before they will sign the documents. The signed Program Plan, and a PCA ready for the NASA Associate Administrator's signature, should be available at the Agency PMC meeting.

For all new programs, the SRB will conduct a NAR as a part of the Evaluation subprocess during Formulation. For new multi-project programs being considered along with their initial projects, this NAR will cover both the program and the project. The results of the NAR will be presented to the CMC as one element of the CRR. After Center management agrees with proceeding, the PE schedules the CR with the SMD PMC. The SRB brings the NAR findings to the CR, and the Program Manager presents program status. Upon a “confirm” decision by the

SMD AA at the CR, the program and SMD are ready to seek approval from the Agency PMC and the Administrator.

The PE, with concurrence of the DAA/Programs, works with the IPAO to schedule the Agency PMC, which should occur as soon as possible after the CR. At the Agency PMC meeting, the Program Manager presents a summary of the program, including topics in the Program Plan. The NAR Chairperson conveys the NAR's results and findings. SMD responds to the NAR findings, and makes its recommendation to the Agency PMC. If the PMC recommends transition to Implementation, this recommendation goes forward to the NASA Associate Administrator with the proposed PCA. A PCA signing meeting with the NASA Associate Administrator is arranged by the Agency PMC Executive Secretary after the NAR presentation to the Agency PMC. Approval of the new program to proceed to Implementation is usually conveyed by the NASA Associate Administrator to the SMD AA at the meeting and is subsequently made official by the NASA AA's signature, along with that of the SMD AA, on the PCA.

With the NASA Associate Administrator's approval, the SMD AA can authorize the transition of the program to Implementation. The signed PCA and the Program Plan form the baseline for the Implementation subprocess. If there are outstanding items in the Program Plan, such items should be resolved and then presented to the SMD AA in a subsequent meeting. If the Agency PMC does not recommend transition to Implementation, or if the NASA Associate Administrator does not approve the transition, the program may remain in Formulation, addressing whatever deficiencies are identified as the rationale for not proceeding to Implementation, may be re-baselined, or may be terminated. If cancellation is the chosen option, the PE should ensure that the appropriate lessons learned are captured in an archive such as the on-line Lessons-Learned Information System.

5.6 IMPLEMENTATION SUBPROCESS (PHASES C, D, AND E)

The Implementation subprocess implements the approved program/project requirements and plans. Project implementation includes Design and Development (Phase C), Integration and Test, through launch and in-flight checkout (Phase D), and Mission Operations (Phase E). The subprocess focuses on translating the input products that come from Formulation into the production of formal output products and services for customers. During Implementation, the PE and Program Manager work together to ensure the following actions and information are developed and documented:

- Update Program and Project Plans as required.
- Conduct an annual review and update of the PCA, if necessary.
- Finalize Project Data Management Plan(s).
- Finalize agreements with other NASA and non-NASA U.S. organizations for required support.
- Finalize tracking and network usage requirements.
- Finalize international agreements with foreign partners, either LOAs or MOUs as required.
- Finalize NEPA compliance documentation.
- Finalize Orbital Debris Assessment.
- Generate HQ Mishap Preparedness and Contingency Plan

- Perform the Nuclear Launch Safety Approval process, if sufficient nuclear material is present on the spacecraft.
- Receive Launch Readiness Statement from Center.
- Conduct Mission Readiness Briefing for SMD PMC, preparatory to launch.
- Generate any other program and project-unique documentation specifying NASA HQ requirements or constraints.

5.6.1 HQ Tasks During Phases C & D

NPR 7120.5 designates the Program and Project Managers at the Centers as responsible for implementation of missions, along with PIs for PI-class missions. HQ does not have day-to-day management responsibility; however, missions are selected to fulfill specific portions of the NASA Science Plan, and the SMD AA has a vested interest to ensure that implementing organizations carry out assigned projects effectively. The SMD AA assigns responsibility, through a Science Division, to the PE and PS for tracking the performance of a project against the program-level requirements and against the schedule and cost cap.

While the Program Manager implements the program through direction to the Project Managers, the PE conducts program/project assessment and reporting tasks during implementation as described in Section 5.8.1, “Program/Project Assessment and Reporting.” The PE works with the program and project to monitor the performance metrics identified in the Project Plan, and reported by the project to the CMC. The PE attends the monthly and quarterly status reviews by the projects to Center management. This is done to ensure the project direction given is consistent with the Agency governance model and SMD desires. The PE conducts an independent assessment of the project progress against established metrics. He or she reports assessment results to SMD management during the regular monthly flight program review with the DAA/Programs. Such PE independent assessments continue throughout the project’s life. In addition, the PE becomes a primary advocate for the project in the launch vehicle manifesting process with the SOMD. Support of Flight Planning Board meetings is essential to maintaining proper communication. The next subsection describes what the PE does to ensure approval for launch.

Another key task is to monitor the progress of implementation of international agreements through the system, from collection of negotiated requirements from the projects to the drafting of the agreement in the OER, to the progress through the various departments and agencies that must provide approvals. One key forum for tracking agreement progress is the Science Pending International Agreements Database (SPIAD) (see Chapter 7, “Partnerships”) and the associated monthly meetings held with OER. Throughout the Phase C-D development period, the PE should also maintain a contact list of key stakeholders to notify in the event of a significant anomaly or hardware mishap, and ensure that findings from these are incorporated, as appropriate, into Lessons-Learned databases.

5.6.2 Launch Preparation and Support

The following basic set of documents is required prior to the launch of any given mission:

- Compliance with NEPA necessitates either an EA or EIS
- Nuclear launch safety approval, if sufficient nuclear material is present on the spacecraft

- Appropriate contingency plans
- A statement from the implementing Center Director certifying readiness for launch.

Figure 5-6, "Launch Preparation Documentation Process," provides an overview flow chart for the required documentation.

The PE bases the order of document preparation on the legal requirements and project complexity. In general, NEPA compliance commences in Formulation, with a target for completion prior to the CDR in Implementation. If sufficient nuclear material is anticipated as determined early in the NEPA process, the Nuclear Launch Safety Approval process commences in Formulation. The PE also determines if there are mission-unique requirements that necessitate the preparation of additional pre-launch NASA HQ documents.

The PE executes the NEPA Compliance Process, working closely with the designated SMD NEPA compliance representative and the Office of the General Counsel. The PE prepares the EA or EIS in accordance with applicable regulations and law. A Notice of Intent is published in the Federal Register prior to preparing the Draft EIS. When the Draft EIS is complete, a Notice of Availability is published in the Federal Register. Another Notice is published whenever the final EIS is available. The PE prepares the Record of Decision that is approved by the SMD AA.

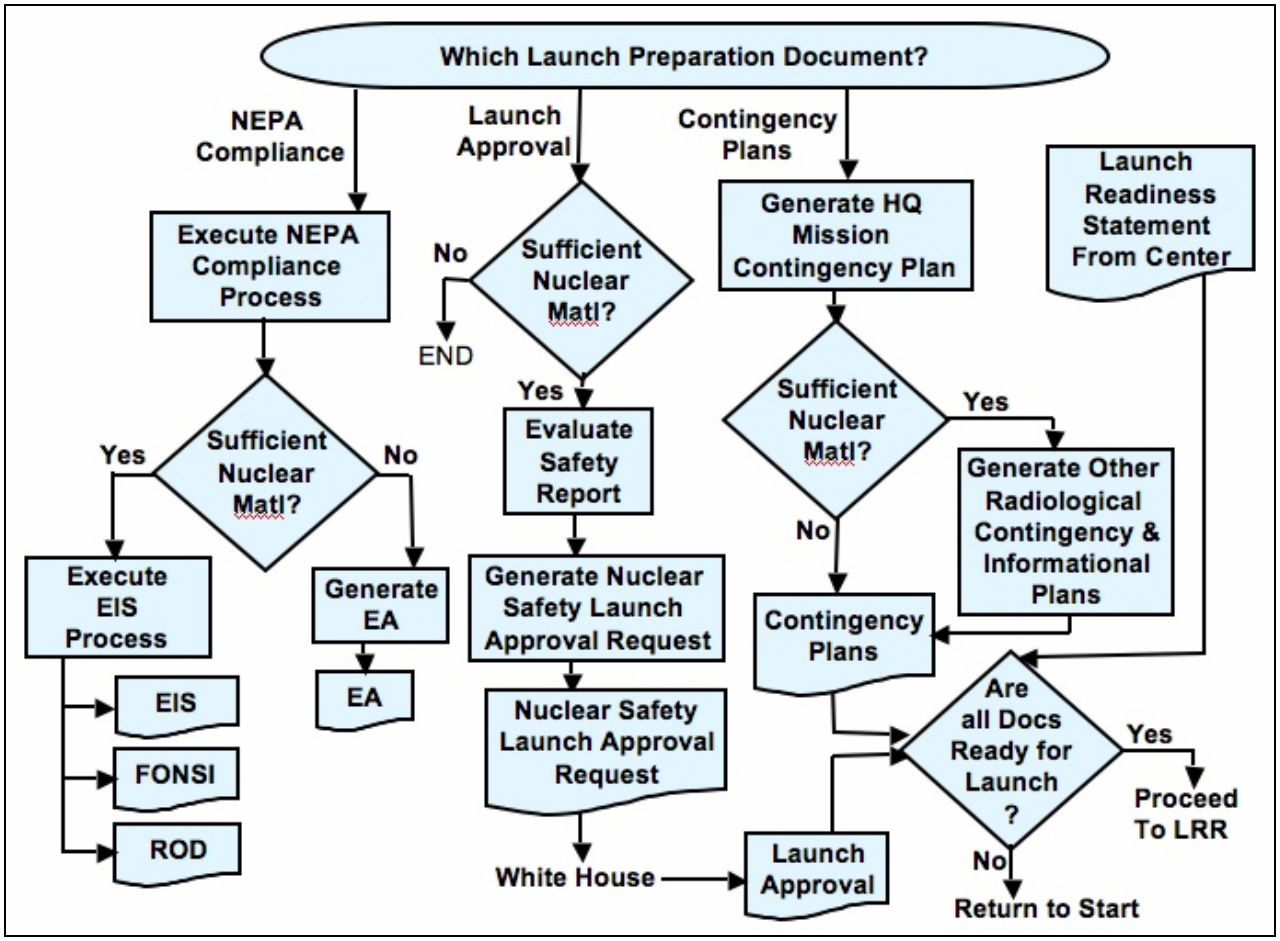

Figure 5-6. Launch Preparation Documentation Process

The project at the implementing Center prepares the Safety Analysis Report (SAR) and delivers it to the PE, nominally 12 months prior to launch. The Interagency Nuclear Safety Review Panel receives and reviews the SAR and prepares a Safety Evaluation Report that is delivered to the PE nominally 6 months prior to launch. The PE uses this information to prepare and coordinate the Nuclear Launch Safety Approval Request. The Request is signed by the NASA Administrator for submittal to the Office of the President. The Office of the President renders a Nuclear Launch Safety Approval decision and notifies NASA in writing of the results. A positive Nuclear Launch Safety Approval decision is mandatory for launch.

At least one month prior to launch, the PE prepares the NASA HQ Mishap Preparedness and Contingency Plan in accordance with NPR 8621.1, “NASA Procedural Requirements for Mishap Reporting, Investigating, and Recordkeeping,” coordinating its development with the

HQ Office of Safety and Mission Assurance (OSMA), and then negotiates concurrences with the appropriate parties and obtains approval from the SMD AA.

Approximately three weeks before launch, following the MRR with the implementing CMC and prior to the Mission Readiness Briefing (MRB) with SMD, the project will complete the Safety and Mission Success Review (SMSR). The SMSR is jointly chaired by the HQ Chief Safety and Mission Assurance (SMA) Officer and the NASA Chief Engineer. It is the forum for the responsible SMA officers from the implementing Center; the Project; the launch vehicle organization, usually Kennedy Space Center's Launch Services Program; and any other interested parties to provide the SMSR co-chairs with an integrated Safety, Mission Assurance and Engineering assessment upon which to base an operational decision of launch readiness. The PE coordinates with the responsible SMA officials involved and works with the HQ SMA office to prepare the Certificate of Flight Readiness (CoFR) delivered by the SMA Chief to the SMD AA at the MRB.

Following the MRR and the SMSR, the project provides the MRB to the SMD PMC, coordinated through the PE. This briefing typically includes a brief description of the mission and its science objectives, results of any risk assessment reviews including discussion of principal residual risks, readiness for launch including residual work to be done, the launch sequence of events, and a summary of Public Affairs plans for launch. The Program Manager provides the Program Office's assessment of readiness for launch. The SMD AA receives the Launch Readiness Statement from the responsible Center director, which lists the principal remaining concerns of the Center, if any. If the Launch Readiness Statement is acceptable, the SMD AA or designee provides approval during the Launch Readiness Review at the launch site during the KDP-E review.

5.6.3 Transition to Science Operations (Phase D to E)

Transition of a flight program from Phase D to Phase E occurs when on-orbit check-out has been completed, typically 30 to 90 days after launch. Earth orbiting missions typically begin science operations immediately after this, while planetary missions typically have an extended cruise phase, in some cases several years, before the spacecraft reaches its planetary destination, is checked out and data acquisition begins. For these missions, Phase E begins with a cruise period where science data taking is minimal or non-existent. To effect this transition, NPR 7120.5 requires a Post-Launch Assessment Review (PLAR) to be presented to the SRB.

PE responsibilities continue during the MO&DA phase; however, a different PE may be designated for science operations. With a handover, the outgoing PE ensures the incoming PE has all the pertinent project-related files and background information for understanding the mission, spacecraft, operations team, and any special considerations. The PS assumes additional responsibility during Phase E, working in close coordination with the PE (Sometimes the same person serves as PE and PS). Thus science management elements of MO&DA are usually merged with program management elements into science operations. The project may reissue the Project Plan with a focus on Phase E operations, and the PE reviews and concurs, if appropriate, on this revision of the Plan. The Program Manager must approve the revised Project Plan, but in some science themes, the Program Manager's role decreases or changes during mission operations.

At some Centers there is a transfer of responsibility for the flight project from a development organization to one that specializes in MO&DA. This may involve a change in project manager and other key staff. The CMC usually conducts a Receiving Review with the transferring and receiving organizations, examining the readiness to move the project, and considering such factors as the state of the spacecraft health, completeness of in-orbit checkout, readiness of the operations Center to inherit responsibility, plan for retention of pertinent flight system development data, the thoroughness of training of the flight operations team, and the qualifications of any new members of the team. As a final step before the actual transfer, SMD requests the Center to present a summary of the Receiving Review to the SMD PMC for concurrence. Sometimes the Receiving Review fulfills the NPR 7120.5 requirement for a PLAR or can be combined with the PLAR. In some instances, this review responsibility may be delegated by the PMC to the Science Division.

The PE and PS monitor the activities of the science operations including both spacecraft and instrument health and safety. They ensure the process by which science data are collected and processed is such as to achieve the overall mission objectives. They monitor the progress of the mission toward achieving its Level 1 science requirements and mission success criteria. The PE tracks engineering activities, such as:

- Spacecraft checkouts
- Trajectory corrections
- Attitude reference updates
- Momentum wheel de-saturations
- Orbit insertions and trim maneuvers
- Aero-braking operations
- Entry, descent and landing activity for landers
- Landed checkout and mobility
- Consumable status, such as maneuvering fuel, cryogen, battery life or limited life motions of devices
- How well the program meets the HQ-controlled requirements and mission success criteria including Phase E budget, schedule, and technical and programmatic requirements.

Elements of this phase performed in the field by program and project managers include project management and accounting, managing reserves and contingency relative to risk, and

sustaining support for operations. The PE provides insight into program engineering functions conducted by the project, with elements including:

- Spacecraft tracking operations
- Spacecraft command uplink and real-time telemetry operations, including radiometric data collection
- Real-time health and performance monitoring of the spacecraft, instruments, and ground system
- Real-time scheduling of shared facilities – voice and data links
- Real-time pass scheduling/coordination
- Hardware maintenance of operational systems
- Anomaly resolution activity
- Post-launch development of flight software and ground systems
- Software sustaining engineering (e.g., fixing software errors, development of new capability).

During the prime mission phase, if not before, the PE initiates activities which lead to consideration for approval for an extended mission. These activities include soliciting a proposal from the project and establishing a process for proposal evaluation. This process usually includes submission to a theme-specific Senior Review, a peer review panel, for evaluation of the merits of the proposal. (See Section 5.10.1 “Senior Review”). The PE will work with the DD to accept, modify, or reject the proposal and establish new budget authority for operating in the extended phase. Upon approval for extended mission, the PE takes steps to update international or interagency agreements (see Chapter 7, “Partnerships”).

5.7 EVALUATION SUBPROCESS

The Evaluation subprocess, as defined by NPR 7120.5, deals with evaluation by external teams, and is the continual, independent evaluation of the performance of a program or project. Independent evaluation here is unbiased and conducted outside the advocacy chain of the program/project The purpose of Evaluation is independently to assess the continuing ability of the program or project to meet its technical and programmatic commitments in order to provide value-added assistance to the Program Manager and recommendations to the SMD AA, as required. This subprocess may be in addition to internal peer reviews and evaluations, however, with the NPR 7120.5D innovation that merged the Project’s SRB with the IPAO-led IRT, some of the distinction between internal and external reviews has been muted. NPR 7120.5D defines the SRB and the set of reviews to be conducted by the SRB, and NPR 7123.1 provides entrance and exit criteria for each review. The Evaluation subprocess consists of the planning and conducting of these independent assessments during Formulation and Implementation of a program.

The Evaluation process is focused primarily around the KDPs that lead to Phase transitions for projects, which were discussed in this chapter’s earlier sections. In addition, programs are subject to a Program Implementation Review (PIR) every two years, which evaluates the progress of the program against its Program Plan objectives and presents the results to the Agency PMC. Program redirection to align with adjusted Agency objectives could be an outcome of this activity.

5.7.1 Program Executive Responsibilities for Evaluation

For programs and projects which are anticipated to be Category 1 or 2 and whose governing PMC is the Agency PMC, the PE works with the IPAO, the implementing Center, and the OCE in Phase A to establish the SRB. This single team serves as the review board for each major review for the program or project as it occurs. For Category-2 projects where the SMD PMC is governing, the PE works with PA&E and the implementing Center to establish an SRB for the project. The SRB becomes the official review team for all aspects of the project. For Category-3 projects, the PE works with the Center SMA Office to establish the appropriate independent review panels. Category-3 projects may have an SRB jointly established by SMD and the implementing Center, or this review function may be delegated to a Science Division or to the Program Office at the Center. In any case, the SRB conducts reviews as required throughout the program or project life cycle and reports to the governing PMC. For projects governed by the SMD PMC, IPAO may or may not participate, although the Science Divisions are encouraged to use IPAO whenever possible.

NPR 7120.5D, Section 2.5 addresses how the SRB is to be implemented. For a PNAR, NAR, or PIR, the PE works with the IPAO to construct the Terms of Reference (ToR) to be used by the SRB to conduct these reviews, and helps to select an SRB chairperson and team members. Team members need to have the correct expertise for the specific project to be reviewed and should be truly independent of the program/project and free of any potential conflicts of interest. The ToR and the names of the proposed SRB chair and membership are provided in a memo from IPAO to the SMD AA. The final list must be approved by the PA&E AA, the Center Director, the Technical Authority, and the SMD AA.

NPR 7120.5 Section 2.5.3 allows the SMD AA to call for a special independent review if there is a need. For such a special topic assessment where IPAO is not involved, or for a NAR for a Category-3 project, the PE takes the lead in writing a charter and assembling a list of prospective candidate chairpersons to present to the SMD AA for a selection. When selected, the PE works with the chair to develop team membership. The SMD AA approves the team membership and charter.

For independent reviews, the PE monitors the assessment performed by the review team and the presentation of its findings. The PE ensures meetings are scheduled, agendas are established, minutes are written, actions are followed-up, review findings are published, and charts are prepared for a summary presentation to the Agency PMC of the SRB results presented to the DPMC. The PE supports the program and project in implementing responses to approved findings from the independent assessment.

5.7.2 Independent Evaluation Reviews

The PNAR, NAR, PIR, and special topic assessments are independent reviews, each addressed below, that are needed for Phase transitions at KDPs. The SRB usually perform the functions of these external reviews, or, in special cases, there may be a separate independent team chartered by the Directorate.

5.7.2.1 Preliminary Non-Advocate Review and Non-Advocate Review

New programs and projects are subject to a PNAR to enter Phase B and a NAR to enter Implementation. The role of the PNAR in the Approval subprocess is discussed in Section

5.4.2, “Phase A to B Transition” and of the NAR in Section 5.5.1, “Project Approval.” The PNAR evaluates the program or project’s readiness to move into preliminary design by investigating the clarity of its stated objectives, the state of requirements development, and the reasonableness of the proposed schedule and life cycle cost. For AO-initiated projects, down-selection from competitive Phase A studies occurs at the Phase A-B transition, and the Technical, Management, Cost, and Other factors (TMCO) review of the Phase A CSR serves as the PNAR. The NAR evaluates the program or project against the PCA and Program Plan to assess the state of definition in terms of completeness of requirements and thoroughness of technical and management plans, technical documentation, alternatives explored, and trade studies performed. The NAR also evaluates cost and schedule estimates and the contingency reserve in these estimates. The findings of both PNAR and NAR are presented to the SMD PMC, and if Category 1, to the Agency PMC in order to obtain approval for the project to transition to the next phase.

If a new program is an uncoupled or loosely coupled multiple-project program, the NAR will be applied at the point the first project is ready for Implementation. The NAR, however, will evaluate both the program and the project, so that when approval is sought from the Agency PMC, it is for the project and for the overall program.

5.7.2.2 Program Implementation Review (PIR)

Programs are reviewed every two years after entering Implementation by an IPAO-led program SRB in a PIR. If possible, the IPAO will combine the PIR with a program review in order to reduce the impact to the program. Details of the reviews are coordinated between the SRB chair, the PE, the program manager and the Systems Management Office (SMO) at the Center. According to NPR 7120.5, the PIR is designed to ensure that the program’s scope and content remain tightly linked to the Agency strategic plan, that the program’s implementation follows the intent of the Program Plan; and that the program is meeting the NAR Baseline performance cost, and schedule commitments. The PIR provides a validation of conformance to the PCA and Program Plan. It includes:

- Assessment of progress and milestone achievement against original NAR baseline.
- Review and evaluation of the cost, schedule, and technical content of the program.
- Assessment of technical progress, risks remaining, and mitigation plans including descope plans.
- Determination of program deficiencies that will result in revised projections exceeding predetermined thresholds.
- Presentation of PIR findings to the program manager, to any applicable CMC, to the DPMC at NASA HQ, and to the Agency PMC.

5.7.2.3 Special Topic Assessments

For projects with exceptional risk, higher cost, high visibility, or other unique aspects, or projects having serious programmatic difficulty, the SMD AA may choose to convene an independent team to conduct a special review to validate performance against specific program-level requirements and objectives set forth in the Program Plan, or its requirements appendix, or to investigate a specific technical issue within the project. The team reports findings to the Science Division, to the SMD PMC, and upon request, may report the results to

the Agency PMC. Such special topic assessments are performed in support of the SMD AA's oversight of approved programs and projects. The team for special reviews is made up of relevant experts from the SRB, augmented if necessary, by highly knowledgeable specialists from organizations outside of the project's advocacy chain. Special-purpose independent reviews (e.g., Cancellation Review) are conducted when directed by the Agency or Directorate PMC. Elements such as the anticipated inability of a project to meet its commitments, an unanticipated change in Agency strategic planning, or an unanticipated change in the NASA budget may initiate such reviews. However, externally initiated cancellation reviews are rare. Usually such reviews are recommended by the PE-PS-PA-Program Manager team because they continually assess project performance, and extrapolate trends and anticipate threats to HQ-controlled requirements relative to cost, schedule and science/technical performance.

5.7.2.4 Systems Management Office

The Systems Management Office (SMO) at a NASA Center reports to the Center Director in support of technical authority, and provides program/project management resources for system engineering, risk management, verification and validation, systems review, requirements management, resource planning and control, and independent cost estimation. The SMO establishes independent review boards at the Center, including developing the charter, selecting team members, organizing reviews, and publishing results. The SMO also works with IPAO and the PE to assemble the SRB for a project. Note that some centers may call this function by a name different than SMO.

5.8 MANAGEMENT ACTIVITIES THROUGH ALL PHASES

This section covers Headquarters program/project management topics that apply during all phases in both Formulation and Implementation.

5.8.1 Program/Project Assessment and Reporting

With approximately 100 SMD projects in Formulation, Implementation and Operations, one of the PE's key tasks is to help condense the large volume of information from the projects to a manageable, meaningful stream that correctly depicts project status without overwhelming SMD senior managers with details. The PE also uses this information to assess project performance and anticipate problems. Regular reporting to the SMD management chain is critical to maintaining overall knowledge of the directorate's condition and to enabling action to solve identified problems. There are several tools in use to help convey this information. Most of these are hosted on the ScienceWorks server, described in Section 9.2, "ScienceWorks Web Portal."

5.8.1.1 Weekly Reporting

For all projects that have entered Formulation, the PE tasks the project to submit short weekly status reports each Friday using the SMD Weekly Report electronic system, located on the ScienceWorks server at this web address: http://ossim.hq.nasa.gov/ossim/home.htm. These reports capture, at a very brief summary level, the most significant project accomplishments for the previous week. Weekly reporting should continue throughout development and the project's prime operational mission. Reporting during extended missions can be reduced to major events only. The PE edits the report as necessary for his/her projects on Monday

morning, adding HQ-unique information as appropriate. The SMD Chief Engineer, or designee, performs a final quality edit and archives the report on Monday afternoon. The SMD Weekly Programmatic Report is a compilation of the individual status reports archived on the ScienceWorks server website for SMD management access.

5.8.1.2 Monthly Reviews

SMD holds monthly reviews with the projects, with the SMD DAA/Programs and with the SMD AA. To meet monthly, quarterly and annual oversight requirements, the PE assesses program and project progress and performance against the program-level requirements, cost plan, and development schedule. In normal project reporting, the PE receives monthly status and progress reports from the Program Office or project. These are accomplished either through visits to the project, videoconferences, or telephone conferences.

Prior to monthly reviews with the projects, the projects upload their presentation material electronically into the "project" area of the SMD Monthly Reporting system, located at: https://ossim.hq.nasa.gov/sprogrev/ on the ScienceWorks file server. The PE then creates monthly project assessment reports for electronic presentation to SMD management, and installs these reports on the ScienceWorks server in the "program" area of the same Monthly Reporting site. The presentation is made by the PE to the DAA/Programs, the SMD Chief Engineer and cognizant Science DD at the Flight Program Monthly Review. This is followed a few days later by Division presentations at the SMD Monthly Review to the SMD AA, applicable other offices at HQ and representatives from each Center that implements SMD projects. These presentations are uploaded into the "directorate" area of the same website. In general, the DDs make this latter presentation, using information provided by the PE. Information presented at the SMD Monthly Review is more summary in nature, because of the shorter length of the meeting and its open nature. SMD senior staff positions also present status at the SMD Monthly Review.

The PE conducts ad hoc assessment and reporting his/her findings whenever necessary to SMD management for programs or projects that are projected to have high development costs, unusually high public or NASA visibility, or other unique features. The PE especially performs these tasks for programs or projects experiencing unusual difficulties. This reporting often falls outside the normally scheduled cycle.

5.8.1.3 Milestone Database

This electronic database of program and project milestone dates is located at: https://ossim.hq.nasa.gov/milestones/ also on the ScienceWorks file server. The PE maintains the program and project milestone dates on a monthly basis which allows SMD management rapid access to programmatic high level milestones. The Milestone Database captures actual dates of past milestones and current best estimates of future milestone dates but does not track schedule performance against any baseline. The database is selectable and sortable by any of several parameters, and the result can be downloaded into an Excel spreadsheet on the user's computer. Since this database is used to create 90-day forecast reports to NASA upper management, it is crucial that the PE keep it up-do-date with the current best estimated milestone dates.

5.8.1.4 Science Pending International Agreements Database

SPIAD is an electronic database, located at: http://ossim.hq.nasa.gov/intl/ on the ScienceWorks server. SPIAD contains the status of work on all international LOAs and MOUs that are in process by the OER. It also includes those LOAs and MOUs that have been finalized since the database's establishment. This database, managed jointly by SMD and OER, is the primary tool for prioritizing the workload of those working on the content agreements in both organizations. This allows the PE to ensure limited resources are being placed on the most critical agreements. The database is managed under the oversight of the International Agreements coordinator in SMD's MPD.

5.8.1.5 Requirements Management System

The Requirements Management System (RMS) is an electronic system, located at: https://ossim.hq.nasa.gov/smdrms/home.htm on the ScienceWorks server. RMS is the official repository of approved program and project documentation. All official SMD-produced documents and letters covered in this document, after signature, are to be converted to PDF files and uploaded into the RMS. The system also contains a set of semi-official information on each program and project, including the budget, the program-level requirement for launch date, and the organizations involved in project management, science management, and spacecraft and instrument development. The PE is responsible for ensuring that RMS contains the latest information and documentation.

5.8.1.6 Quarterly Status Reports to the Agency PMC

Once a quarter, the IPAO schedules a State of the Agency program/project status review for the Science Directorate to present to the Agency PMC at the Baseline Performance Review (BPR) the current status of Category-1 and -2 projects and their encompassing programs. While the emphasis is generally on Category-1 projects, the Agency PMC may request information on any SMD activity. The DAA/Programs and the SMD Chief Engineer usually make presentations. These presentations are assembled from the various sources mentioned above as well as the answers to a set of questions from the OCE that are sent to every program manager, project manager, Center and Directorate. The PEs support the DAA/Programs in preparing the presentation material for the BPR.

5.8.1.7 Government Performance and Results Act Metrics

The SMD is required to submit performance metrics and narratives, in response to the Government Performance and Results Act (GPRA) of 1993, to support the proposed new budget for the fiscal year commencing two years hence and the Operating Plan for the coming fiscal year. The PE provides technical information, and schedule and performance milestones, to the appropriate Program Analyst to support this activity and coordinates the reporting on performance metrics for the past and current fiscal years. They also help to create specific metrics for their programs/projects for future years.

5.8.2 Budget Control, Descope, and Cancellation

The Program Manager, the Project Manager, and the PE need to work as a team to maintain budget control, working in close coordination with the DD, the PS, the PA and Center management. This includes:

- Formulating the baseline budget,
- Determining the baseline cost target, which is incorporated into the PCA and Program Plan and its project requirements appendices,
- Supporting the Planning, Programming, Budgeting, and Execution (PPBE) process , as described in Section 8.2, “Budget Process”
- Working with program and project offices to understand budget categories and provide guidance to them on acceptable expenditures, and
- Assessing the execution of the program; this includes monitoring costs, risks and their mitigation strategies.

5.8.2.1 Cost Baseline Establishment and Control

Cost baselines are determined during Phase B of Formulation. Projects that have been selected with a competitive AO will find their cost baselines established as cost caps to be enforced as stringently as possible for two reasons. First, the assumption is that because of a funded, competitive Phase A, the proposing team will have made a thorough estimate of the project’s ultimate cost and the TMCO review will have done an independent estimate that will have been reconciled with the project estimate to come up with the cost cap number. Second, since the selection was through competition, if NASA were to augment a project’s cost because of poor estimating or underbidding, it would send a message that the Agency stands ready to rescue any projects that overrun, which is likely to lead to additional underbidding in order to win. This is not cost-effective management.

For all projects with a life-cycle cost estimate above $250 million (the definition of “Major Projects”), Congress and the Office of Management and Budget (OMB) have established cost control and reporting requirements, per the 2005 *NASA Authorization Act* and National Security Presidential Directive 49 (NSPD-49), *U.S. National Space Policy*, respectively. These requirements include the publishing of baseline development cost and schedule targets and notification of any increases of 15 percent or more or slips of six months or more. Moreover, projects which increase by 30 percent are subject to an additional provision of the law that cuts off funding 18 months after the increase becomes known and the Administrator and Congress are notified, unless Congress approves additional expenditures on the project beyond that point. The Agency must also report annually to Congress on the status of major projects, and establish the external cost baselines for newly approved projects in the President’s Budget documents submitted to Congress, including the IBPD. The OMB direction also contains specific reporting requirements similar to those of the 2005 Authorization act, but requests additional information and includes all U.S. Agencies involved in space development programs. This includes additional information requests on subcontracts of less than $50 million for projects in Formulation. Such cost control and reporting requirements are incentives for NASA to avoid overruns.

The intention for all projects is to hone the total life cycle cost during Phase B. When the program-level requirements are ready to be finalized, the project, program, Center management, and SMD should be ready mutually to commit to the baseline development cost necessary to achieve the stated requirements, including appropriate reserves for the nature of the project. They all must be prepared to take action if it is found that the established baseline costs will be exceeded.

The Centers submit a PPBE response yearly to describe their budget requirements for the coming fiscal year. Their submission is based upon instructions and guidelines issued by PA&E and SMD. The PE supports the development of the SMD instructions and guidelines by coordinating their development with the PAs, the PSs, and the DDs, and the other PEs working on missions or projects in a Division's programs. The PE also supports the review of Center responses, makes recommendations to the DD, evaluates impacts of changes in the PPBE submission, and contributes to the determination of final operating plans.

5.8.2.2 Descope or Cancellation as Controls

Provided that the HQ-controlled requirements are preserved and due consideration has been given to the use of budgeted contingency and planned schedule contingency, the project is required to pursue scope reduction and risk management as a means to control cost. A descope plan must be prepared during Phase B, and be presented at the CR for Implementation. The Project Plan should define these potential scope reductions and the time frame in which they could be implemented. The NASA Center(s) and SMD must agree to any scope reductions affecting the program-level requirements. This is accomplished by the project requesting a change to the HQ-controlled requirements though the DPMC.

During Implementation, the project will develop the mission within the established performance, schedule and cost requirements identified in the documents. If at any time during development the Program Manager or the PE believes that the project is unable to achieve the requirements, or that the project development cost is anticipated to exceed the baseline by either the Congressional 15 percent or 30 percent limit, or the schedule has slipped by more than 6 months, they must notify the DD, who initiates a management notification process.

Moreover, if a project is anticipated to exceed the baseline cost or schedule by an amount specified in its PCA or Program Plan, the Program Manager or PE can recommend to the SMD AA that a Cancellation Review be conducted. A Cancellation Review is not required if the SMD AA agrees to change the requirements or if the project is able to demonstrate that cost growth is above and beyond their control or if they can descope the mission concept or design in order to stay within the technical, cost, and schedule constraints. If none of these occurs, then it is appropriate to recommend a Cancellation Review. If SMD decides a Cancellation Review is in order, the NASA Associate Administrator and the NASA Chief Engineer must be notified before the Center is contacted.

At the Cancellation Review, the project presents to the DPMC:

- The status of the project with respect to requirements
- Rationale for relief from the requirements
- Actions already taken to regain meeting the technical, cost, and schedule requirements
- Proposed further actions, and associated risks, to return the project's life cycle cost to within the cost baseline
- The resulting re-planned schedule, if the change is granted.

At the end of the review, the DPMC recommends, and the SMD AA decides, whether the project may continue development with approved changes to the requirements, if appropriate, or to cancel the project and to communicate the decision in writing to the Implementing Center. For Category-1 or -2 projects, the SMD AA submits a recommendation for cancellation to the

Agency PMC, which makes the final decision. Any approved changes to the requirements are documented in a revised PCA and Program Plan or its project appendix.

The Chief Financial Officer (CFO) may also call a cancellation review if they believe the project will exceed its baselined development cost cap by an excessive amount. In general, the CFO will only be reviewing those programs or Category-1 projects that report to the Agency PMC. If the CFO recommends cancellation at the conclusion of its review, the final decision will be made by the Agency PMC.

5.8.3 Ground Systems Management

SMD manages several ground systems for NASA. Among them are the range and tracking systems that support the suborbital sounding rocket program, the facilities that support high altitude scientific balloon activity, and several systems for data analysis and archiving of the collected and processed mission science data. These systems may fall under NPR 7120.5; NPR 7120.7, NASA Information Technology and Institutional Infrastructure Program and Project Requirements or NPR 7120.8, NASA Research and Technology Program and Project Management Requirements, at the option of the MDAA and validated by the NASA Chief Engineer. NPR 7120.5 has declared ground programs that directly support flight assets to be subject to the same policy as the flight projects themselves; however, unlike most flight projects, these ground networks do not have a definitive beginning and ending. Nevertheless, they are required to develop and maintain a PCA and Program Plan. Since many have been operational for years, they are firmly in Implementation, and thus are not subject to a NAR, although any significant new projects may be.

Some of these, like the Space Telescope Science Institute, the Spitzer Science Center and the Earth Science Data Information System are managed under the auspices of the same programs that manage the flight project that will collect the data. These have program/project documentation governed at the level of their umbrella program. Others, especially those multi-mission in nature, are managed as separate programs or projects, such as the DSN. These latter are subject to NPR 7120.8 and its requirements and are tracked and reported in a manner similar to research projects.

5.8.4 Risk Management

Risk Management is an organized, systematic decision making process that efficiently identifies, analyzes, plans (for the handling of risks), tracks, controls, communicates, and documents risk to increase the likelihood of achieving program/project goals. Risk Management is essential to sound project management and vital to safety and mission success. The requirements and information needed for applying risk management to projects, as required by NPR 7120.5, are defined in NPR 8000.4, Risk Management Procedural Requirements.

PEs and Program Managers need to become familiar with NPR 8000.4. The following sections summarize the key requirements of this NPR. This information is intended only to clarify aspects of NPR 8000.4 that are of special importance to SMD personnel. This section does not reduce, redefine, or alter the requirements in the NPR.

5.8.4.1 Risk Management Concept

Risk is characterized by the combination of the probability that a project will experience:

- An undesired event. This may include such things as a cost overrun, schedule slip, safety mishap, environmental impact, failure to achieve a needed technological breakthrough, or missed success criteria; and
- The consequences or severity of the undesired event.

Risk Management (RM) is a process wherein the project team is responsible for identifying, analyzing, planning, tracking, controlling, and communicating effectively the risks (and the steps being taken to handle them) both within the team and with management and stakeholders. As depicted in **Figure 5-7**, " Risk Management Process," RM is a continuous, iterative process to manage risk in order to achieve mission success. It should be an integral part of the normal program/project management and engineering processes.

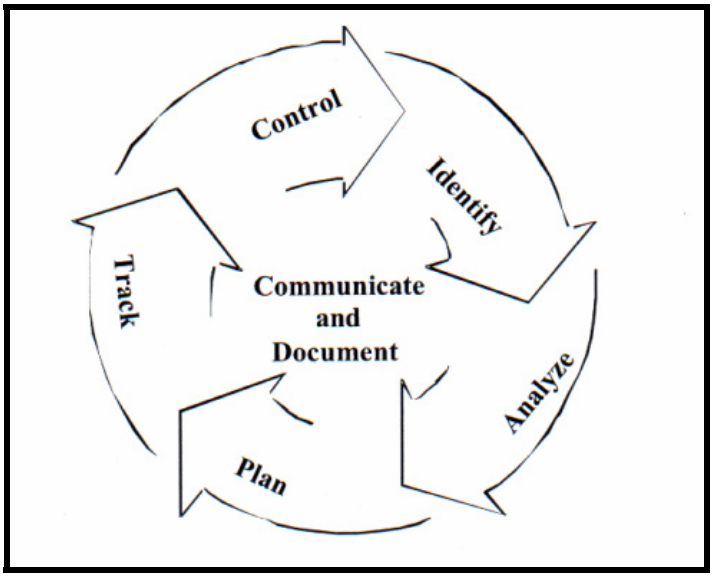

Figure 5-7. Risk Management Process

5.8.4.2 Responsibilities for Risk Management

NPR 8000.4 defines specific risk management responsibilities for program management, project management, the governing PMC, the SMA organizations, the SMO, and both HQ and Center functional offices. SMD personnel having management responsibility for programs and projects should be familiar with these formally defined roles.

SMD management personnel are required to accomplish the following activities:

- Have a thorough understanding of the RM Process, which is composed of the six areas of risk identification, risk analysis, planning, tracking and control as defined in NPR 8000.4 Chapter 2.
- Assure that RM is performed within the project throughout the life cycle, with execution as a formal process at the initiation of Phase B.
- Assure that RM is governed by a formally approved RM Plan. This can be a Center-defined RM Plan, a tailored version of a Center RM Plan, or a program or project-developed RM Plan.
- Provide periodic insight on the process for risk identification, with a special emphasis on assuring that the process is formally defined, continuous, objective, and thorough.
- Provide periodic insight on the process for risk analysis, with a special emphasis on assuring the process is formally defined, continuous, objective, and thorough. Risk analysis is concerned with evaluation, assessment, probability estimation, impact estimation, and

categorization into a standard “Five by Five” presentation format plotting consequence versus likelihood.

- Provide on-going insight into the process for risk planning, which includes handling, treatment, and decision making.
- Provide on-going insight on the risk tracking process, which includes monitoring and verification of the defined risk management process.
- Prepare SMD position recommendations on project risk status for required presentations to the governing PMC.

5.8.4.3 Documenting and Communicating Risk

Effective RM requires open, clear, and ongoing communication. The RM documentation process ensures that appropriate policies are established, understood, implemented, and maintained, and that a formal audit trail is developed to establish the origin of, and rationale for, all risk-related decisions. PEs should verify that programs and projects under their auspices have the documentation and processes in place in order to meet the risk documentation and communication requirements as defined in NPR 8000.4, Section 2.7.

5.9 PROGRAM/PROJECT WAIVERS

The tailoring of processes and requirements permitted in earlier versions of NPR 7120.5, that provided managers the framework to easily adjust approaches for formulating and implementing NASA’s diverse programs and projects, has been replaced in NPR 7120.5D by a more structured waiver process. In particular, managers of projects who seek relief from 7120.5 requirements must obtain a written waiver through a process defined in NPR 7120.5 Section 3.6. This particularly applies to multi-project programs, such as Discovery, Earth System Science Pathfinder (ESSP), Solar Terrestrial Probes, and New Millennium, where alternative approaches are sought consistent with project characteristics such as size, complexity, cost, flight frequency and risk. In preparing for the Confirmation Process, the PE will work with the Program Manager to document requested waivers to NPR 7120.5 requirements for Implementation, and will seek approval for them. Prior to the NAR, these requests can be attached to a single waiver form to assure proper routing and control. Deviations or waivers impacting formulation or requiring long lead-time shall be submitted individually early in formulation. Once in Implementation, deviations or waivers must be submitted individually to the appropriate authority, as defined in NPR 7120.5 Table 3-2. Updates to Program and Project Plans will record the approved waiver decisions. The PE must be familiar with NPR 7120.5’s content so that deviations from it can be properly documented and implemented.

Programs that select missions through the AO process, such as Discovery and ESSP, have adopted streamlined management structures, with NASA surveillance, review and reporting requirements reduced to those which are essential to ensure agreed-upon science return in compliance with committed cost, schedule, and performance requirements and with mandatory requirements of NPR 7120.5 for the class of mission. Investigator teams are allowed to use their own processes, procedures, and methods to the extent practical, and are encouraged to develop and implement new ways of doing business when cost, schedule, and technical improvements can be achieved without increasing mission risk. The essential component of this PI-streamlined program management is an “early warning” system, so that management

can take action to correct resource-draining problems early enough to minimize the cost impact. The intent is to invite creative ideas to implement cost constrained missions more effectively through efficient management, requirements control, and the infusion of new technologies and system architectures. Increased responsibility can be given to the PI when satisfactory capability for management and control of key resources (schedule, cost, performance) can be demonstrated. However, all of these management changes will require approved waivers. Waivers that significantly increase risk to project success will be looked upon with disfavor unless the project demonstrates alternate risk mitigation strategies.

Program waivers must be documented in the Program Plan. This particularly includes any that apply to all projects in a mission series. Project-specific waivers will be documented in the relevant mission-specific PLRA to the Program Plans and in individual Project Plans.

5.10 MISSION EXTENSION OR TERMINATION

Mission termination is the process for ending a project that has conducted part or its entire prime mission and may have completed one or more extended missions. This is different than mission cancellation (see Section 5.8.2, Budget Control, Descope, and Cancellation") which refers to ending project activity before the mission is launched.

There are two paths that lead to termination:

- A programmatic path, such as the outcome of a Senior Review or a significant budget reduction
- As a result of a condition on the spacecraft, which may be an unexpected on-orbit anomaly, or the exhausting of consumable resources.

A termination plan should have already been established for missions under normal conditions. When considering a termination directive, the baseline termination plan must be revisited because the planned method of termination may no longer be available. For example, the Flight Operations Team may have lost control of the satellite and cannot execute a controlled de-orbit as originally planned.

5.10.1 Senior Review

Upon completing a mission's prime phase activity (Phase E), a mission may be eligible to continue its science program and extend its operations. There are several justifications that may be applicable for seeking approval for a mission extension. Among these may include that a mission extension is needed to complete the mission's Level-1 requirements or is justified as being in the best interests of the Nation and NASA. National interests may include the fact that the mission has become vital to the success of programs run by other Federal departments or agencies. An example may be the use of a mission's data in terrestrial or space weather predictions by the National Oceanic and Atmospheric Administration. In the case of NASA's best interest, a mission may be extended if its data are part of compelling and vital science investigations that contribute to achieving NASA's strategic goals. In all cases, the PE and PS for the operating mission will assemble a decision package for the director of the appropriate SMD division that will support the extended mission phase. Often the Senior Review process is an appropriate method for developing the inputs to such a decision package.

A Senior Review is conducted every two or three years in each of the major science research areas within SMD (specifically Astrophysics, Earth Science, Heliophysics, and when necessary, Planetary Science). The Senior Review is a science peer review that provides a comparison of the relative science values of a set of missions within an SMD science area or sub-area. The intent of the Senior Review process is to maximize the scientific return from these programs within finite resources. The Senior Review provides inputs toward "re-balancing" the elements of the MO&DA portfolio. (It is not a review leading towards the selection of new capabilities or research as is the case for solicited programs under NASA AOs and NRAs.) The SMD DD of the science area under review uses the evaluations and findings from these comparative reviews to define an implementation strategy and give programmatic direction to the missions and projects concerned for the next two to four fiscal years.

A Senior Review panel consists of senior scientists who are established and respected members of the particular science community served by the missions under evaluation. This panel will review and evaluate science proposals for extending missions that are either completing their prime-phase (Phase E) or were previously extended. The panel will rate the proposals as to scientific merit, based on their extended mission objectives and capabilities. The principal product from the Senior Review is the report written by the panel. The report represents the panel's consensus findings and evaluations for each of the submitted proposals as well as a ranked list of the projects based on the panel's assessment of the science value per dollar needed to extend the mission. Projects at the top of the list are likely to get funded; those at the bottom may be terminated. The SMD Science DDs draw the make or break line, based on available budget. The panel's report often provides inputs to a set of instructions that the DD will relay to the mission for the approved extension. These directives could include terminating one or more instrument teams of the mission, providing priority on the elements of the mission's science plan, revised budgets for the mission's extended phase, etc.

If the outcome of a Senior Review or of other programmatic factors such as a significant budget reduction is that a project is not recommended for continued funding and therefore must be terminated, the PE develops a termination recommendation letter for SMD AA review and approval. (See Section 5.10.3, "The Termination Process.")

5.10.2 Major On-orbit Anomaly

Sometimes an anomaly occurs that threatens the viability of continued operations of a mission. It either affects the flight system or instruments such that it eliminates any possibility of operating the science payload successfully, such as happened with the Wide Field Infrared Explorer failure, or affects the safe on-orbit decommissioning, such as for Tropical Rain Forest Measurement Mission, where loss of attitude control affected plans for de-orbit or permanent parking orbit operations. Similar situations can occur when a spacecraft runs out of consumables, such as propellant, cryogen or attitude control gas, or subsystems vital to spacecraft operations.

In these cases the project will evaluate all mission termination options, considering the on-orbit failure or exhaustion and the options that remain for the safe termination of the mission. The team investigates if anything can be done to safely de-orbit, park and passivate the satellite and assesses the risks of alternate de-commissioning approaches. The existing termination

plan is evaluated for other mission parameters (science partnerships, mission operations contracts and commitments, etc.) that might have a bearing on a path to choose.

5.10.3 The Termination Process

When the termination decision is made there are several steps to be followed. The termination plan needs to be finalized in accordance the directives accompanying the termination decision and to the satisfaction of the program and project managers and the PE. On-orbit elements of the plan must be reviewed and concurred upon by OSMA for orbital debris and other risk components.

The PE develops the termination recommendation letter for SMD AA review, incorporates any changes, and after approval, ensures the approved letter is distributed to all affected parties. For operating missions, terminations must be handled in accordance with NPD 8010.3, Notification of Intent to Decommission or Terminate Operating Space Missions and Terminate Missions. The NPD requires 90-days advance notice of intent to terminate an operating mission. The PE determines if international or interagency partnerships or MOUs are in effect and if so, the PE drafts formal termination announcements and notifies OER. As appropriate, international and interagency partners are notified. The PS is expected to make the contacts with the mission science team partners while the PE works with the program and project to notify mission operations team partners.

THIS PAGE INTENTIONALLY LEFT BLANK

6.0 TECHNOLOGY PROGRAM MANAGEMENT

6.1 OVERVIEW

This chapter was originally intended to describe the responsibilities, policies and practices for SMD technology management. However, with a currently constrained budget, technology development has been refocused within the projects for which its use is intended. Technology development as a stand-alone activity is de-emphasized and forums to develop strategies for its continuation are in abeyance. With future budgets, this situation could change and this chapter will be augmented as needed. For now, SMD's portfolio of current technology development is under the oversight of the SMD Deputy Associate Administrator for Programs. Each SMD Division designates a Program Executive (PE) as a Division Technologist to represent the Division Director for technology requirements, priorities, policies, plans, and practices. They coordinate with center technologists and with the projects managing technology and may present status at monthly Flight Program Reviews.

SMD technology includes three principal elements: (1) Focused Technology Development, (2) Cross-divisional Technology Development, and (3) Flight Validation. Each of these is discussed in subsequent sections.

Note that technology development spans the Pre-Formulation/Formulation boundary. For these projects, certain technology levels must be reached to advance. The Technology Readiness Level (TRL) is a designation that identifies the maturity and implementation readiness of a given technology. See Appendix D, "Technology Readiness Levels" for TRL descriptions.

PEs of projects with technology needs meet with division technologists to coordinate SMD technology requirements and to ensure that technology plans support the science mission roadmaps. Division Technologists are aware of technology investment priorities and coordinate technology assessments with the projects. They have access to Agency-wide databases composed of technology products and programs from a wide range of providers, including the Small Business Innovation Research (SBIR) Program, and Agency and university-sponsored research and development (R&D) programs.

There are additional elements of technology development that exists in all SMD divisions under the banner of Supporting Research and Technology (SR&T), much of it focused on technology for instrument development. This includes such subelements as the Geospace Research and Analysis program, the Planetary Instrument Design and Development Program (PIDDP), the Astronomy and Physics Research and Analysis program, and elements managed by the Earth Science Technology Office (ESTO) at GSFC. These technology elements will be described in a future edition of this Handbook.

6.2 FOCUSED TECHNOLOGY DEVELOPMENT

Focused technology development is dedicated to high priority technologies for specific science missions. These technologies provide essential capabilities, without which project-specific objectives could not be met. Development activities range from basic research (low TRL) to technology infusion into science missions (high TRL). Focused technologies are often identified as a result of Advanced Concept Studies, in which necessary innovative

technologies for new roadmap missions are specified. A specific program or project requiring use of a focused technology manages its development. Technology developed in this manner is authorized by that program's Formulation Authorization Document (FAD), and is subject to the authority of that program's Program Commitment Agreement and Program Plan. In coordination with the Program Manager, the PE ensures that the focused technology development is appropriately represented in these documents. Progress is measured against the program's implementation plan and is reported during monthly SMD management reviews. Both the PE and Program Manager are to review the project's Technology Development Plan to ensure that a reasonable level of risk management is established for the technology under development. The concurrence of both (or lack thereof) factors into the outcome of the Mission Definition Review or its equivalent.

6.3 CROSS-DIVISIONAL TECHNOLOGY DEVELOPMENT

These elements of SMD technology are selected to address the needs of more than one Division, based on applicability to multiple science themes and missions. This advanced technology can cover a broad range of fundamental (typically low to mid-TRL) capabilities supporting multiple applications. Technologies within this category may be advanced to the point that they are ready for infusion into a focused program, or selected as a candidate for flight validation. Cross-divisional technologies are managed separately from the projects that will eventually use them. They must comply with NPR 7120.8 for execution rather than NPR 7120.5. These technology development efforts must be initiated with a FAD, or authorized within an existing program, and managed like an independent project. The PEs involved with cross-divisional technology conduct periodic reviews with Division and Directorate management, participating Centers, and other stakeholders to evaluate progress against the implementation plans. Stakeholders are generally the PSs, Program Managers, and representatives from projects dependent on that technology. Significant accomplishments are presented to SMD management during monthly reviews. There may be close coordination with one or more of the SBIR technology efforts.

6.4 FLIGHT VALIDATION

Flight validation provides a path to flight-validate key mission-enabling or enhancing technologies, thereby retiring the risk of first use for future science missions. These technologies should also be cross-divisional, but at a higher TRL than those above. The New Millennium Program (NMP) was formulated to develop and flight-validate mid-TRL technologies to facilitate technology infusion into science missions. Flight Validation activities are formulated, approved, and implemented as projects within the NMP in accordance with the processes prescribed by the NMP Program Plan. Although Flight Validation is designated as a cross-divisional advanced technology component of SMD technology, this does not preclude other candidate technologies from consideration. Any technology validation need that has a demonstrated multi-Theme or multi-mission applicability and meets the NMP criteria for TRL may be considered for Flight Validation. Technologies are selected from the SMD technology needs inventory for NMP flight validation through a competitive NRA and peer review process. PEs who support science missions requiring flight validation of a new device or concept should work closely with the Division Technologists and Center Technologists to make sure that the need is accurately represented.

7.0 PARTNERSHIPS

7.1 OVERVIEW

The Science Mission Directorate (SMD) pursues partnerships with a wide variety of national, international, academic, and commercial organizations. These partnerships enable SMD to leverage others' resources to accomplish common scientific goals. Partnerships also serve to fulfill national policy objectives. On the larger scale, partnerships enable more of humanity to participate in the enterprise of scientific exploration and discovery.

The National Aeronautics and Space Act of 1958, as amended (42 U.S.C. § 2451 et seq.), also known as the "Space Act," provides the authority to enter into agreements with prospective foreign and international organizations, other U.S. Government agencies, commercial entities, academic institutions, and other organizations. In particular, the Space Act authorizes NASA to enter into contracts, leases, cooperative agreements, and other transactions as necessary in the conduct of its work. The terms "contracts," "cooperative agreements," and "other transactions" generally reflect types of legal instruments that NASA can use to fulfill its mission.

Pursuant to the Space Act, and in accordance with other Federal laws, NASA can "contract" for the acquisition of goods and services for its direct benefit using Government-wide procurement laws and regulations such as the Federal Acquisition Regulations. NASA can also enter into cooperative agreements and grants with educational institutions or other entities pursuant to NASA's own regulations: *The Grants and Cooperative Agreement Handbook* – 14 CFR Parts 1260 and 1274 and the *Federal Grant and Cooperative Agreement Act of 1977* ("Chiles Act"). Lastly, the Space Act authorizes NASA to enter into "other transactions" if necessary to fulfill its mission. The agreements under NASA's "other transaction" authority are commonly referred to as "Space Act Agreements."

The information provided below covers the use of NASA's "other transaction" authority or Space Act Agreements to develop partnerships. While the term "Space Act Agreement" is often employed in reference to agreements with the private sector, it can also apply to agreements with other federal agencies, educational institutions, state or local governments, or other external entities. NASA Policy Directive (NPD) 1050.1, *Authority to Enter into Space Act Agreements*, states that "Such Agreements constitute commitments by the Agency of resources (including personnel, funding, services, equipment, expertise, information or facilities) to accomplish stated objectives of a joint undertaking with an Agreement Partner. The Agreement Partner can be a U.S. or foreign person or entity, an educational institution, a Federal, State, or local governmental unit, a foreign government, or an international organization."

NASA categorizes its Space Act Agreements into the following:

- Reimbursable agreements provide for payment of NASA's costs by the other party
- Nonreimbursable or cooperative agreements require NASA and the other party each to bear the cost of the undertaking
- Funded agreements require NASA to fund a party, if the objective cannot otherwise be achieved through the use of a cooperative agreement or grant.

Effective development and implementation of partnerships requires a management discipline since partnerships have enough in common to warrant the use of common processes and tools. Partnerships may also involve significant policy and/or legal issues, such as international relations, intellectual property, or potential liabilities.

The following set of established processes and related information are provided to help managers develop and manage partnership agreements.

7.2 RELEVANT NASA GUIDANCE

The following NASA documents guide the formulation and implementation of partnerships to ensure compliance with Federal laws:

- NPD 1050.1, *Authority to Enter into Space Act Agreements*
- NASA Advisory Implementing Instruction 1050-1, *Space Act Agreements Manual*
- NPD 1360.2, *Initiation and Development of International Cooperation in Space and Aeronautics Programs*
- NPD 1371.5, *Coordination and Authorization of Access by Foreign National and Foreign Representatives to NASA*
- NPD 2210.1, *External Release of NASA Software*.

In particular, NPD 1050.1 explains the Administrator's delegation of authority to approve Space Act Agreements and specifies the minimum review and concurrence required by NASA's Associate Administrator (AA) of External Relations or designee, Chief Financial Officer (CFO) or designee, and General Counsel or designee. NPD 1050.1 also stipulates that the Director, Headquarters (HQ) Operations shall review all cost estimates for reimbursable agreements developed by HQ organizations, including SMD.

7.3 INTERNATIONAL AGREEMENTS

This section outlines the role of NASA HQ's Office of External Relations (OER) in assisting SMD to develop and implement international agreements, and the types of export control laws and programs that should be taken into account in developing international agreements. This section also presents the types of international agreements and the international agreement development process.

7.3.1 Office of External Relations

Other NASA organizations assist SMD to develop and implement partnerships including OER, a mission support office within NASA HQ. OER serves as the coordinator of NASA international and interagency cooperative and reimbursable partnerships. Specifically OER:

- Coordinates Agency-level policy interactions with the U.S. Executive Branch departments and agencies.
- Directs NASA's international relations program goals and provides oversight and management of NASA's Export Control Program and J-1 Visitor Program. Through the J-1 Visitor Program, foreign nationals may visit the United States temporarily to teach, lecture, study, observe, conduct research, consult, train, or demonstrate special skills.
- Coordinates clearances for NASA travelers and NASA aircraft operations overseas.

- Works with SMD Program Executives (PE) and Program Scientists (PS) on issues and opportunities for international collaboration. OER desk officers work best as part of the project team, from the start, advising program and project managers on potential international partnerships,
- Develops agreements for the Mission Directorate's international cooperative activities and facilitates the agreements process with the foreign partner and U.S. Government agencies.
- Coordinates meetings between NASA officials and their international counterparts.
- Manages NASA-sponsored international workshops and NASA's participation in multinational forums and conferences.

7.3.2 Export Control

Export control restrictions of both the International Traffic in Arms Regulations and the Export Administration Regulations must be stringently enforced when dealing with foreign persons and organizations. OER manages the NASA Export Control Program. This program ensures compliance with U.S. law and regulations, provides policy guidance, and represents the Agency on interagency working groups dealing with international technology transfer, non-proliferation, and export control. OER also provides the NASA liaison with other U.S. Government agencies on a wide spectrum of areas. These include national security policy, national space policy, interagency agreements, and personnel exchange agreements. Securing approved international agreements in appropriate circumstances becomes important to ensure compliance with the export control laws, as well as with relevant international treaties and laws.

7.3.3 Types of International Agreements

The types of international agreements include the following:

- Inter-Governmental Agreements (IGAs) are used for highly significant activities and government-to-government framework agreements for a broad range of activities. They are typically signed by the Secretary of State.
- Memoranda of Understanding (MOUs) are used for high-level commitments and/or "significant" cooperation. This includes hardware exchange, cooperative space flight missions, politically sensitive cooperation, and initial cooperation with a new partner. MOUs require interagency clearance in a process governed by the Department [of State] Circular No. 175 (C-175), dated December 13, 1955, which mandates review and concurrence by selected other Federal agencies of proposed international agreements. OER manages the clearance process for NASA. These interagency reviews are coordinated through the U.S. Department of State (DOS) and must coincide with United States foreign policy objectives. DOS authorizes the negotiation, conclusion, or termination of an internationally binding agreement.
- Letters of Agreement (LOAs) are used for smaller value, short term, and minimal risk cooperation, such as science cooperation, data exchange, visiting researchers, and equipment loans. The exchange of letters is conducted by OER. LOAs require review and concurrence by relevant NASA HQ offices and NASA Center personnel. A C-175 review is generally not required as long as the agreement is under U.S. law; however, coordination with key interagency partners may be needed.

7.3.4 International Agreement Development Process

International agreements are developed as follows:

- The responsible Division determines whether technical discussions are required between the project and its foreign partners during the study phase. If so, the PE and PS works with a newly formed project during or before Phase A to define the content of a study phase LOA.
- Program personnel must consult with OER to determine whether an LOA or a MOU is necessary. They must also initiate and execute the activities to generate these agreements. Any agreement in which there is an exchange of funds for services provided, such as a reimbursable agreement for tracking services, also requires coordination with and approval by the CFO and Director, HQ Operations. Foreign procurements using contract mechanisms are not treated as reimbursable Space Act Agreements, as they are subject to procurement laws and regulations and generally do not require OER's involvement.
- Once OER determines the appropriate type of agreement for the international cooperative activity, the PE provides technical agreement content to OER to begin the drafting of formal agreements, LOAs, MOUs, or reimbursable agreements. The PE enters the technical agreement content into the on-line Science Pending International Agreements Database (SPIAD), a task database jointly maintained by SMD and OER. This database and the process of prioritizing development of agreements are overseen by the Assistant Associate Administrator for Strategy, Policy and International (AAA/SPI). OER facilitates the agreement process with the foreign partner and also coordinates and gains internal NASA concurrences including review by the Office of the General Counsel (OGC) for any international law or other legal issues.
- OER signs LOAs. The NASA Administrator signs MOUs but can delegate the authority to sign individual agreements. Occasionally this delegation is given to senior level U.S. Government officials, including U.S. Ambassadors and/or senior NASA management officials.
- Periodic decision level reviews of agreements' status are conducted by the AAA/SPI with the division international coordination points of contact and cognizant OER staff. The objectives of these reviews are to assess agreement status, identify and remediate bottlenecks, and establish a cross-cutting awareness of SMD's cooperative status with various international partners.
- The PE should be aware of an agreement's termination date, so that the process for agreement renewal is started well in advance. Also, if the activity/scope of the cooperation changes, the PE must promptly discuss these changes with OER to amend the impacted agreement.
- If specified in the MOU, the PE may also need to develop project implementation plans.

7.4 INTERAGENCY AGREEMENTS

The Space Act authorizes NASA to enter into interagency agreements with other Federal, state, or local governmental agencies as necessary to fulfill its mission. NPD 1050.1 explains the Administrator's delegation of authority to approve such agreements and specifies the minimum concurrence required by NASA's CFO, or designee, and OGC, or designee.

7.4.1 Types of Interagency Agreements

Collaborative activities with other U.S. Government agencies and state, regional, and local government agencies are predominantly focused on joint research programs and the use of NASA research results in practical applications. Nonreimbursable and reimbursable agreements with other agencies of the Federal Government and state/local governments can be entered into under the authority of the Space Act, Sections 203(c)(5) and (6), 42 U.S.C. § 2473(c). Such agreements, often called interagency agreements, are a formal statement of understanding between NASA and an agency or agencies of the Federal, state, or local government requiring NASA programmatic or institutional activities over a period of time to accomplish the agreement's purpose. Interagency agreements may take the form of a MOU, LOA, or an Implementation Agreement (IA). The NASA Administrator or SMD AA signs high-level interagency agreements. Program-level agreements, or IAs under a higher-level agreement, may be delegated for signature to a SMD Division Director (DD) or other designee.

7.4.2 Interagency Agreement Development Process

Interagency agreements are developed as follows:

- The Interagency Agreements Manager, located in the Management and Policy Division (MPD), manages SMD's commitments to other agencies assuring timely processing, periodic review, and active archival of interagency agreements. The SMD Interagency Agreements Manager constitutes the primary Agreements Manager within SMD under the terms of NPD 1050.1, Section 5(f).
- SMD proposes and initiates interagency agreements in collaboration with the OGC. The OGC co-locates an attorney in SMD as its Directorate Lead Counsel (DLC) to work on legal issues pertaining to SMD, including the creation of interagency agreements.
- The PE/PS planning to pursue an interagency collaboration begins by consulting with the Interagency Agreements Manager and the SMD's DLC.
- Prior to signature of interagency agreements, the SMD obtains concurrence of OER's Director for Interagency Affairs or his/her designee. SMD also obtains concurrence from the CFO on interagency agreements committing the Agency to expenditure of funds or to reimbursable work.
- After signature, one signed original shall be submitted to the SMD Interagency Agreements Manager for archiving in a central file containing all SMD interagency agreements.

7.4.3 Interagency Partnerships Led by the Executive Office of the President

While SMD is responsible for space-based scientific exploration of the Earth, the solar system and the universe beyond, other Federal agencies are also engaged in scientific research and applications programs using their unique capabilities. Much of the cross-agency planning and oversight of these endeavors is led by offices in, or committees established by, the Executive Office of the President (EOP). Senior management officials in SMD serve as liaisons to or members of these offices and committees. The councils, committees, and working groups of the type named in this section are established by charters or terms of reference, and not by interagency agreements.

7.4.3.1 Office of Management and Budget

Interactions with Office of Management and Budget (OMB) on SMD budget matters are managed by the Associate Administrator with the assistance of the Director of the Management and Policy Division. Congressional testimony from NASA and other Agencies is cleared by OMB, which organizes interagency review; within SMD, the Management and Policy Division manages this process.

7.4.3.2 Office of Science and Technology Policy

The Senior Advisor on the Science Process and Ethics (SASPE) and MPD manage SMD's interactions with the Office of Science and Technology Policy (OSTP).

7.4.3.3 National Science and Technology Council

The President's Science Advisor/Director, OSTP chairs the National Science and Technology Council (NSTC). This Cabinet-level Council, which is the principal vehicle for inter-agency coordination within the Executive Branch, has an elaborate substructure of committees, subcommittees, and working groups. These include the Committee on Science and the Committee on Environment and Natural Resources (CENR) on which the SMD AA sits. The SMD Deputy Associate Administrator and Chief Scientist are the SMD AA's CENR alternates. The SMD AA appoints NASA HQ and Center personnel to serve on these interagency subcommittees and working groups; SASPE manages these appointments.

7.4.3.4 Earth Science and Applications Forums

Most of the EOP-led, SMD-related interagency partnerships concern Earth science and applications activities. At the top level, the NASA Administrator is the official NASA member on Cabinet/Agency-head bodies, and is usually represented by a senior SMD or SMD/ESD official. Principal examples include the following:

- Under the NSTC, CENR,, for which the Director, Earth Science Division is a Vice-Chair, coordinates Federal Earth science research. One entity under the CENR is the U.S. Group on Earth Observations (GEO), which orchestrates the U.S. participation in international GEO activities and oversees the U.S. Integrated Earth Observation System. Others include Subcommittees on Air Quality and Disaster Reduction.
- Within the EOP, a Cabinet-level Committee on Climate Change Science and Technology Integration and its Interagency Working Group on Climate Change Science and Technology manage two interagency programs: the Climate Change Science Program (CCSP) and the Climate Change Technology Program (CCTP). CCSP is implemented via an interagency program office led by a senior Department of Commerce official, and SMD/ESD leads and populates many of its working groups. The CCTP is led by the Department of Energy and includes an SMD/ESD member.
- Within the EOP's Council on Environmental Quality, the Committee on Oceans Policy oversees the Interagency Committee on Ocean Science and Resource Management Integration which coordinates Federal programs in oceans research and applications.

7.5 INTRA-AGENCY AGREEMENTS

SMD writes intra-agency agreements when two or more NASA Mission Directorates or Centers plan collaborative opportunities that involve:

- Significant cooperative human or capital resources, such as those that can be more than easily assigned to overhead indefinitely
- Large expenditures or funds, such as a significant amount relative to affected reserves.

Intra-agency agreements are between two parts of NASA, so these agreements should provide a clear understanding of each party's responsibilities.

7.5.1 Types of Intra-Agency Agreements

Intra-agency agreements include the following:

- Directorate-to-Directorate agreements are used to:
  - Govern joint programs, such as robotic precursors to human exploration or human deployment.
  - Service science missions.
  - Govern the provision of services such as transportation and communications from one Directorate to another.
- Center-to-Center agreements are required to cover collaboration on joint programs and projects.
- Center agreements should be settled ideally:
- Before submitting a proposal in response to an HQ solicitation, such as a NASA Research Announcement or Announcement of Opportunity,
- As a prerequisite support document to a Formulation Authorization Document (FAD) or a Program Commitment Agreement (PCA).

7.5.2 Intra-Agency Agreement Development Process

Intra-agency agreements are developed as follows:

- At a minimum, intra-agency agreements should include the following:
  - Purpose, objective, and scope of the work content covered by the agreement
  - Description and/or list of the responsibilities and obligations of each party including deliverable and receivable goods and services
  - Beginning and end (expiration) dates
  - Signatures of the relevant Directorate AAs or Center Directors.
- The Center Directors (or their designees) develop, establish, and approve intra-Center agreements, thereby ensuring they are aware of and concur on their mutual obligations. Center managers drafting these agreements consult with the relevant HQ PE. Intra-agency agreements should be enforced by the signatories. HQ involvement in inter-Center agreements is necessary only if irreconcilable differences develop. HQ can act as a binding arbiter of the dispute.

- SMD's Deputy Associate Administrator (Programs), with the assistance of the M&PD, maintains a database of intra-agency agreements approved at the Directorate level of higher related to management of flight project formulation and development covered by NPD 7120.5, *NASA Program and Project Management Processes and Requirements*. SMD personnel may access this database, the Requirements Management System, so they can see examples of intra-agency agreements and identify other SMD personnel with experience in establishing and monitoring these agreements.
- The MPD ensures the continuity of technical capability and the diffusion of knowledge about intra-agency agreements among PEs throughout the SMD. NPR 7120.5 appendices contain requirements for how intra-agency collaborations are to be documented in FADs, PCAs, and program and project plans. The Science Divisions have the resources and competencies to structure effective intra-agency agreements. However, it is the affected Center Directors who have the authority to make such agreements, with support from programs and projects.

7.6 AGREEMENTS WITH OTHER EXTERNAL ORGANIZATIONS

Effective implementation of NASA programs and the extension of NASA research results often require partnerships with academia, industry, or other non-governmental organizations. Whenever there is a commitment of Agency resources to collaborate with an academic institution, commercial entity, non-profit, or other external organization, the commitment should be documented in an appropriate agreement.

7.6.1 Types of Space Act Agreements with External Organizations

Agreements governing collaborations with external organizations should be consistent with the categories of Space Act Agreements in NPD 1050.1 to include the following:

- The Reimbursable Space Act Agreement is an agreement for the reimbursable use of NASA facilities, personnel, expertise, or equipment by a public or private entity wishing to advance research and development (R&D) efforts. The effort involves a transfer of funds or other financial obligation from the private entity to NASA. (NASA will not transfer funds to the other entity.) The terms, conditions, and schedule are negotiable, but NASA must be paid in advance for each stage of the effort. (NASA may not compete with commercially available facilities or services.)
- The Nonreimbursable Space Act Agreement is a collaborative R&D effort where NASA and the other party (or parties) contribute personnel, use of NASA facilities, expertise, equipment, or technology. Each party agrees to fund its own participation under this agreement. No transfer of funds or other financial obligation between NASA and the private entity is permitted. NASA participation requires that the other party adequately demonstrate:
  - Relevance of the proposed activity to a NASA mission or program requirement
  - Adequacy of the other party's contribution in comparison to NASA's contribution
- The Funded Space Act Agreement refers only to an agreement under which appropriated funds will be transferred to a domestic agreement partner to accomplish an Agency mission, but whose objective cannot be accomplished by the use of a contract, grant, or Chiles Act cooperative agreement. This limitation is important to avoid confusion, overlap, and inconsistent practice that could jeopardize all NASA agreement practices. All funded Space Act Agreements are subject to U.S. law.

7.6.2 External Organization Space Act Agreement Development Process

Space Act Agreements with external organizations often involve the commitment of substantial Agency resources, as well as potentially significant legal issues such as the protection of intellectual property and potential liabilities. Therefore, SMD Space Act Agreements with external organizations should, at a minimum, follow NPD 1050.1, which requires review and concurrence by the CFO and OGC. The Director, HQ Operations, reviews and concurs on SMD Space Act Agreements when they are for reimbursable agreements only.

7.7 DELEGATION OF AUTHORITY FOR SPACE ACT AGREEMENTS

Formal delegation of authority mandated by relevant NPDs is required for any individual signing a Space Act Agreement and is necessary to ensure consistency in the handling of agreements. NPD 1050.1 stipulates that AAs and NASA Center Directors are responsible for negotiating, amending, executing, and terminating Space Act Agreements within their area of jurisdiction, and can re-delegate that responsibility within certain restrictions. This exercise of jurisdiction does not apply, however, for international agreements, which are under OER's jurisdiction.

SMD provides the following guidelines for exercising delegated Space Act Agreement authority, except for international agreements:

- Authority to initiate and negotiate the programmatic content of all SMD Space Act Agreements (except International Agreements) is delegated to the directors of the SMD Science Divisions, with final approval and signature authority retained by the AA or designee.
- Mission DDs may further delegate the authority to initiate and negotiate the programmatic content of interagency agreements to members of their program staff who possess appropriate technical, scientific, or managerial responsibility for the proposed agreement.
- •The AA or a higher level official signs correspondence with the heads of U.S. Government or foreign government agencies. One or more SMD DDs must sponsor this correspondence.

7.8 TRAINING FOR PARTNERSHIPS

SMD staff requires sufficient guidance for initiation, approval, and implementation of partnerships and the lead times associated with the preparation and approval of partnership agreements. SMD provides:

- Training workshops on NASA and SMD processes for initiation, approval, and implementation of Space Act Agreements as part of the new employee orientation for PEs and PSs.
- Refresher workshops, held annually or bi-annually, for the initiation, approval, and implementation of Space Act Agreements. These refresher courses are for SMD employees who may be responsible for initiating, approving, and implementing Space Act Agreements.

7.9 AGREEMENT ARCHIVING AND ROUTING

NASA is moving to adopt as widely as practicable the Space Act Agreement Maker (SAAM) software application. SAAM provides consistent formats and content for Space Act Agreements. The SAAM system also provides a means for tracking and archival of Space Act

agreements that are not international agreements. International agreements are explicitly excluded from SAAM. OER archives international agreements in its System for International and Interagency External Relations Agreements (SIERA) database. SMD personnel should consult with the SMD International Agreements Manager or the SMD Interagency Agreements Manager to determine the best mechanism for drafting and archiving a specific Space Act Agreement.

8.0 BUDGET AND PERFORMANCE MEASUREMENT

8.1 OVERVIEW

This chapter documents the processes by which SMD develops:

- Its budget recommendation to the NASA Administrator
- The SMD Annual Operating Plan which shows the distribution of appropriated funds for major program and selected projects
- Its performance plan for incorporation into the NASA Government Performance and Results Act (GPRA) Performance Plan and performance measures by which SMD assesses its performance against its performance plan.

8.2 BUDGET PROCESS

The SMD budget process is driven by the overall Federal budget process and by the internal NASA budget process. This internal budget process is called “Planning, Programming, Budgeting, and Execution” (PPBE). Both this process and its relationship to the Federal budget process are documented in NASA’s Financial Management Requirements (FMR) Volume 4 as published by the Office of the Chief Financial Officer. The current operational version of this document is dated July 2006, and it (or any approved updates) can be found as follows:

- Go to the NASA HQ home page http://www.nasa.gov/centers/hq/home/index.html
- Click “Organization”
- Under Mission Support Offices, click “Chief Financial Officer”
- Click “References”
- Click “Read more” under Information and Publications, Financial Management Requirements.

Figure 8-1 shows the overall flow of the PPBE process.

Each step of this process in fully described in FMR Volume 4. This section focuses only on the parts of the process internal to SMD: The development of budget guidelines for the Field Centers through the development of the SMD budget recommendation, program analysis, and alignment for the NASA Administrator.

Although most SMD personnel play some role in the budget process, the organization with the primary responsibility for developing SMD’s budget is the Management and Policy Division (MPD)’s Budget Branch. This branch is divided into six teams. Four of the teams support SMD’s four Science Divisions: Earth Science, Heliophysics, Planetary Science, and Astrophysics. One team, known as the integration team, focuses on budget integration. The remaining team conducts independent assessments of program/project requirements and manages selected processes in support of the program control function such as earned value management. Program Analysts (PAs) staff the Budget Branch. The PAs work closely with Program Executives (PEs) and Program Scientists (PSs) in the Science Divisions to analyze program/project requirements and develop budget recommendations.

PPBE and the internal SMD processes that support the PPBE process result in the development of the President’s Budget. The President’s Budget is a five-year budget with the

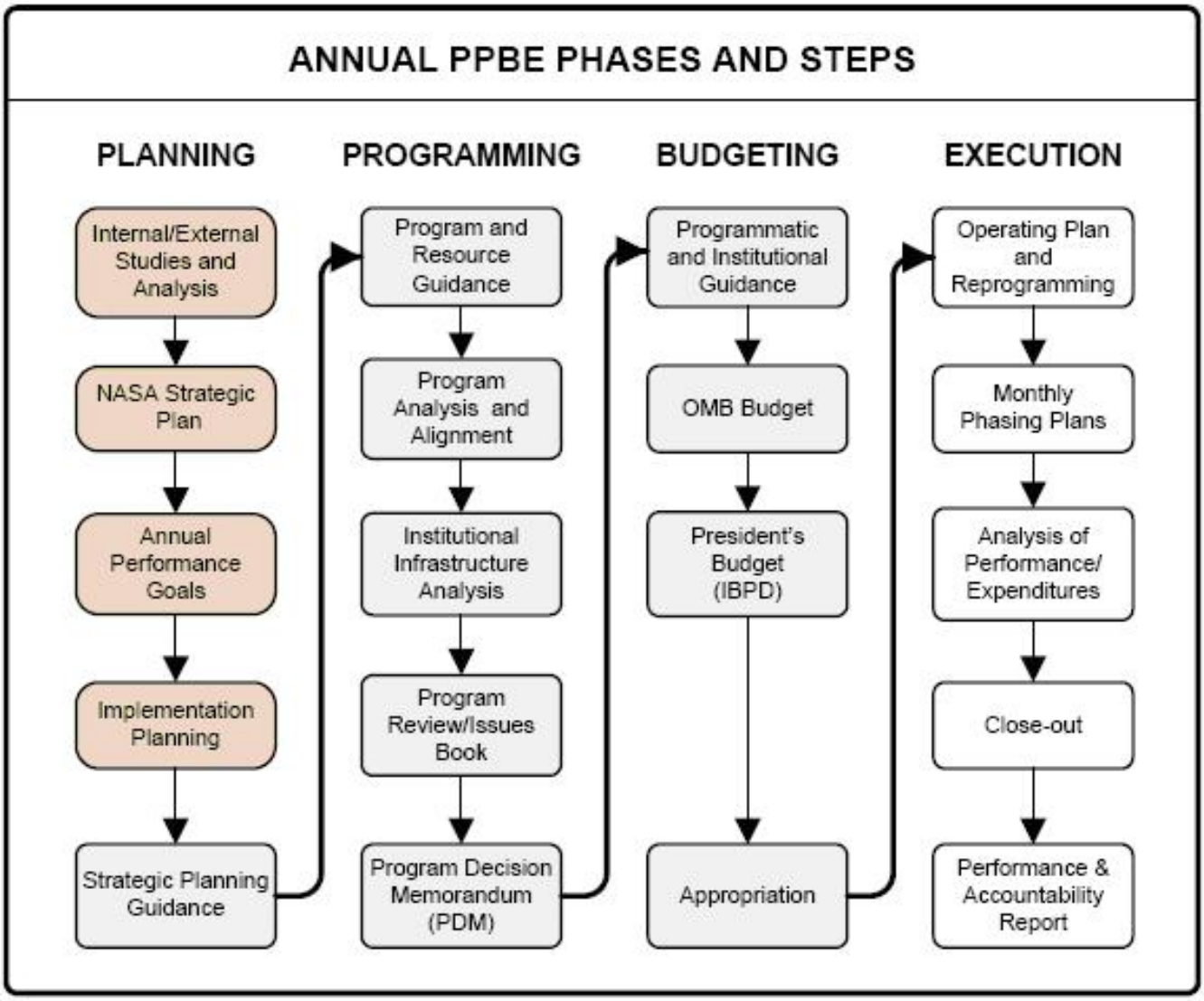

Figure 8-1. PPBE Phases and Steps

first year referred to as the "budget year" and the four subsequent years referred to as the "out-years."

In addition to the development of the five-year budget, SMD develops an annual Operating Plan. The Operating Plan describes how SMD plans to implement the current year budget after that budget as been appropriated by Congress.

Section 8.2.1, "SMD Internal Budget Process," documents how SMD develops the five-year President's Budget.

Section 8.2.2, "Developing the Annual Operating Plan," describes how SMD develops its annual Operating Plan.

8.2.1 SMD Internal Budget Process

The SMD budget process has four steps:

- Developing budget guidelines to the Field Centers
- Conducting program/project reviews of the Field Center submittals
- Developing Science Division-level budget recommendations to the SMD Associate Administrator (AA)
- Developing the SMD budget recommendation to the NASA Administrator.

SMD develops budget guidelines to the Field Centers as follows:

- In accordance with Agency-level strategic planning guidance, the SMD AA defines the overall program priorities and budget strategy for the upcoming process. The PAs prepare narrative and numeric guidance to the Field Centers consistent with this direction.
- The PAs coordinate the draft SMD budget guidance with the PEs and PSs in the Science Division. They then review the draft guidance with the respective Science Division Directors for final approval.
- The final budget guidance is entered into the Agency budget database, known as N2. The narrative guidance is posted on an Agency-level site where it can be seen by the Field Centers.

SMD personnel perform the following activities when they conduct program/project reviews of Field Center submittals:

- The assessment of Field Center budget submittals is conducted as a joint activity among the PAs, and the PEs, and PSs in the Science Divisions. These assessments usually include an on-site project review, and may occasionally include visits to contractors and other facilities.
- Data from the formal Field Center budget submittals combined with the information garnered from the project reviews are used to identify and resolve issues. Issues may include variances in the budget relative to the guidelines, milestone changes, technical problems, contract or subcontract growth, and reserve levels. These issues form a basis for further investigation and analysis.
- Field Centers may be asked to provide additional options to resolve the issues raised in their submittals, including the identification of trade-space at the Center level.

SMD personnel develop Science Division-level budget recommendations submitted to the AA as follows:

- PAs work with the PEs and PSs to develop recommendations on a project-by-project basis. The goal is to resolve all issues at the individual Science Division level while maintaining an executable program within the budget guidelines.
- These recommendations are presented to the respective Science Division Directors. This is usually followed by a few iterations in which the Science Division Director provides direction regarding priorities and requests additional analysis of alternatives that will enable the Division to remain within its budget envelope.
- The PAs consolidate the final Division-level budget recommendation into a presentation package that the Science Division Director and responsible Budget Branch PA brief to the

AA. The Science Division Director presents an overview of Division-level priorities and strategy. The responsible PA then briefs the SMD on each project.

SMD follows the process below to develop the SMD budget recommendation submitted to the NASA Administrator:

- After receiving briefings from all of the Science Divisions, the AA may accept recommendations, request additional options from one or more of the Science Divisions, or immediately make decisions that differ from the Science Division recommendations. The objective is to develop a balanced SMD budget recommendation for an overall program that can be executed within the Directorate-level budget guidelines. Similar to the Division-level process described above, the development of the SMD budget recommendation may require several iterations.
- Following the AA's final decisions, two products are prepared:
  - An update to the N2 database reflecting the SMD budget recommendation
  - A cover letter from the AA to the Director of the Office of Program Analysis and Evaluation. The letter outlines the overall Directorate budget strategy. It briefly discusses the key features of the budget and any issues that may require Agency-level decisions.

8.2.2 Developing the Annual Operating Plan

Once Congress passes NASA's annual appropriation, the Agency must submit an Operating Plan that details the Agency's plans for using the appropriated funds. To support this process, SMD develops an annual Operating Plan that shows the distribution of appropriated funds for major program and selected projects. In a general sense, the process is similar to the budget development process described above. The process is handled more "executively" in the sense that there are no Field Center submittals. However, the Divisions must accommodate the applicable provisions of the legislation in their recommendations. These provisions may include such things as program direction or budget increases/decreases.

Once the appropriation legislation has passed, budget targets are distributed to the Science Divisions. The Science Divisions develop their recommendations in essentially the same manner as described above, and then those recommendations are provided to the AA. Following the final decisions from the AA, the PAs prepare spreadsheets and narratives that document the planned distribution of appropriated funding and provide explanations as to why the distribution differs from levels proposed in the President's Budget for that year.

The annual Operating Plan controls, including program and project totals, as well as the distribution of funds by NASA Field Center, are maintained by the Budget Branch Integration Team on a spreadsheet.

8.3 PERFORMANCE PLANNING PROCESS

The Government Performance and Results Act (GPRA) of 1993 drives the SMD performance planning process. GPRA requires that agencies develop budgets that fully integrate the annual performance plan with other elements of the budget request. The NASA Performance Plan, issued annually in the Integrated Budget and Performance Document (IBPD), establishes the annual performance goals that will be used to measure the Agency's progress in a given fiscal year.

The Performance Plan is one of the inputs used in the PPBE process for budget formulation. FMR Volume 4 documents this process. See Section 8.2 for instructions to access the FMR, Volume 4.

Given FMR Volume 4's detailed description of the budget and performance planning process, this section focuses on the parts of the process that are internal to SMD, i.e., the development of performance measures for submission with the SMD budget recommendation to the NASA Administrator and the assessment of SMD performance against the plan.

8.3.1 Organizational Roles and Responsibilities

In consultation with the SMD Chief Scientist and the MPD Policy and Administration Branch Chief, the designated PA on the integration team (hereafter referred to as "the PA") develops and refines a coordinated approach to the overall SMD performance plan. The PA then works with the other PAs and the PEs, PSs, and Directors in the Science Divisions to develop recommended performance measures.

PPBE and the internal SMD processes that support the PPBE process result in the development of the NASA GPRA Performance Plan. The NASA GPRA Performance Plan details the Agency's performance commitments supported by the proposed budget for the fiscal year in question.

Section 8.3.2, "The SMD Internal Performance Planning Process," documents how SMD develops its performance plan for incorporation into the NASA GPRA Performance Plan.

8.3.2 The SMD Internal Performance Planning Process

The SMD performance planning process has three steps:

- Developing a Performance Plan approach
- Developing performance measures
- Making performance measure adjustments, if necessary, to reflect Congressional appropriations for the fiscal year.

SMD develops the Performance Plan approach as follows:

- After reviewing Agency-level performance planning guidance, the PA develops an overall approach for the SMD performance plan. This is done in consultation with the MPD Policy and Administration Branch Chief and the SMD Chief Scientist.
- The PA reviews and draws from a range of sources, including the Agency guidance, the Strategic Plan, and budget structure, to develop this approach. The PA reviews these sources to ensure the approach achieves appropriate program coverage and balance within and among themes.
- In the absence of new Agency guidance, the approach encompasses three types of annual performance goals (APGs): discrete mission milestones, Agency process or "efficiency" measures, and measures of progress toward understanding fundamental science questions.

SMD personnel perform the following activities to develop performance measures:

- The integration team PA works with the PAs supporting the Science Divisions and directly with the cognizant PEs and PSs to develop mission-related APGs consistent with proposed budgets. The objective is to produce a set of discrete milestone accomplishments that will represent the overall health and progress of each SMD theme.
- These recommended mission-related APGs are presented to the respective Science Division Directors for approval.
- Following the approach developed with the SMD Chief Scientist and MPD Policy and Administration Branch Chief, the integration team PA develops science APGs that flow directly from the Strategic Plan. The PA also works directly with Office of Program Analysis and Evaluation (PA&E) analysts to update the established efficiency measures, consulting with appropriate SMD personnel as appropriate.
- In accordance with Agency guidance, the PA assembles the proposed APGs into required Performance Plan formats to accompany the budget submissions to PA&E, the Office of Management and Budget (OMB), and Congress.
- As the SMD budget proposal matures, the PA checks the APGs for continued alignment with the budget. As the budget recommendation generally requires several iterations at each stage of the process, the accompanying mission-related APGs are often revised several times. Revisions may also occur as the result of PA&E or OMB comments. In such cases, the PA consults with the appropriate PA, PE, and/or PS. Division Directors approve each substantive change.

SMD follows the process below to make adjustments to performance measures to reflect Congressional appropriations for the fiscal year. The integration team PA supports the development of the Performance Plan Update submitted by the Agency in response to the Congressional appropriation for the fiscal year in question. Upon passage, the PA examines the Congressional appropriations for any impacts to SMD programs and supporting APGs. This may include such things as changes to program direction or budget increases/decreases. In each such case, the PA consults with the appropriate PA, PE, PS, and/or Division Director to determine if a revision to or deletion of the APG is warranted. If so, the PA works with PA&E analysts to provide requested supporting material. Division Directors approve each substantive change.

8.3.3 The SMD Performance Assessment Process

The NASA GPRA Performance Report is aligned with the components of the GPRA Performance Plan. In order to assess performance and provide the necessary data for the Agency Performance Report, SMD follows two different processes:

- One for the more subjective measures of progress on fundamental science questions (hereafter referred to as “science APGs.”)
- Another for the discrete mission milestones and the quantitative “efficiency measures.”

SMD coordinates evaluation of the Science APGs using the following process:

- The science APGs call for an external expert review of progress toward understanding fundamental science questions. The Subcommittees of the NASA Advisory Council currently perform this review during their summer meetings. Because this is an independent review, the subcommittees are asked to base their evaluation on whatever accomplishments and/or

disappointments they deem relevant to each of SMD's science focus areas (known as "outcomes" for GPRA purposes).

- As a courtesy, the science divisions provide a listing of items the subcommittees may wish to consider for each area. This material is developed by the PSs serving as Executive Secretaries for the subcommittees and is approved by the division directors.
  - The MPD Policy Branch Chief and PA coordinate a review session with the PSs to ensure an appropriate level of consistency between divisions.
  - This information is then released to the subcommittees by the PSs, who coordinate their review of it and, along with the PA, facilitate clarification of any issues.
- The subcommittees provide their assessments to the PSs, who forward them to the PA.

SMD evaluates performance for the discrete milestones and quantitative efficiency measures using the following process:

- Working with the cognizant PEs and PSs, the PA collects and validates performance data for the mission-related milestone APGs. Documentation for each typically includes press releases and program and project reports.
- The PA also works with the cognizant PAs, PEs, and PSs to collect, integrate, and analyze performance data for the quantitative "efficiency measures." Each of these individuals maintains documentation of the performance results, which include Agency financial system reports and program and project reports.
- The PA integrates all data for submission to PA&E in accordance with guidance received. This may include requests for additional information, such as highlights and accompanying images, which the PA coordinates with the PSs, division directors, and AA as appropriate.

Once all performance data have been gathered and documented, the PA:

- Integrates the data for submission to PA&E in accordance with guidance received. This may include requests for additional information, such as highlights an accompanying images, which the PA coordinates with the PSs, division directors, and AA as appropriate.
- Circulates PA&E Performance Report drafts to the Division Directors for comment and resolves any issues prior to submitting the drafts to the SMD AA for approval
- Coordinates resolution of any issues identified by the AA
- Prepares the final SMD comments for submission to PA&E.

THIS PAGE INTENTIONALLY LEFT BLANK

9.0 MANAGEMENT TOOLS AND INFORMATION SYSTEMS

9.1 OVERVIEW

Science Mission Directorate (SMD) employees use a variety of project management and information systems. These include both applications accessed through the ScienceWorks Web Portal and other Agency applications used to support NASA SMD programs.

ScienceWorks supports the sharing of information among SMD program and project offices and provides an integrated business system interface. ScienceWorks merges existing SMD-created reporting and program/project management applications. It provides an event calendar, file sharing/collaboration tools, and education and public outreach tools. In addition, ScienceWorks provides access to the NASA x500 user directory, top news items in SMD and NASA, and relevant NASA resources such as NASA Forms and Travel Manager.

SMD also uses Agency applications to support SMD programs. These Agency applications include institutional financial systems and applications that directly support employees' needs such as reporting time or requesting training.

Web site references relevant to this Handbook are listed in Appendix E, "SMD Management Handbook Web Site References."

9.2 SCIENCEWORKS WEB PORTAL

ScienceWorks has three key components. They are core, financial, and decision-support modules.

9.2.1 Core Modules

ScienceWorks has five core modules: a calendar, an SMD search function, a file-sharing capability, a NASA Directory lookup function, and current announcements.

The calendar allows users to create or subscribe to group events and post events on the SMD public website. It receives subscriptions through iCal-formatted E-mail. iCal is an Apple Computer personal calendar application. This module also provides a calendar for event management. This feature does not replace the NASA Headquarters desktop calendar used for personal time management.

The Search SMD module supports searching SMD's public website, press releases, and the Earth Science Education Catalogue. It also includes a link to the NASA.gov search page.

The file-sharing capability supports storing and sharing documents, images, movies and other items with the SMD community, partners, and public. It provides two drop boxes, one for the public and one restricted to SMD employees. The file-sharing capability supports auto-file archiving and deletion, user-assigned access rights, user creatable folders, and simple browse functionality.

The NASA Directory lookup function is a quick, convenient way to find NASA employees' telephone numbers, and E-mail addresses. Clicking on an e-mail address launches a user's default E-mail client with the E-mail address in the TO: field of the new E-mail.

The current announcements feature supports the posting of information bulletins for viewing by everyone accessing the ScienceWorks system. The system administrator manages the announcements and bulletins. Announcements can have a designating viewing lifespan, and a history is kept for viewing by all financial modules.

9.2.2 Financial Modules

ScienceWorks has three financial modules. They are the Resource and Analysis Program Tracking for Resources (RAPTOR), Congressional Database (CDB), and Direct Financial Management System (DFMS).

RAPTOR allows SMD personnel to manage research and analysis activities resulting from solicited and unsolicited proposals from initiation and approval through close-out. RAPTOR is a web-based application that replaces SRTS and SYSEYFUS, two financial applications that together provide similar functionality.

CDB is a web-based application that provides online information about NASA funding distribution among various state, congressional district and foreign countries. CDB integrates with several accounting database to produce accurate data for this purpose. It was originally developed in 1996 in response to a deluge of congressional inquiries. The Legislative Affairs Office and the other Mission Directorates currently use CDB.

DFMS is a client-server application that allows personnel to oversee financial transactions.

9.2.3 Decision Support Modules

ScienceWorks has six decision-support modules. They are monthly reports, weekly reports, International Agreements, Inter-Agency Agreements, requirements management functions, milestones database, and the National Research Council (NRC) Action Tracking System (NATS).

The monthly reports module provides reports for SMD's monthly reviews. This module provides reports tailored for the intended audience such as flight program and project review charts and charts for review with the SMD Associate Administrator.

The weekly reports module enables staff to provide program, project, and institutional summaries of the week's events for review by SMD senior management. This module also allows users to retrieve current and historical/archived information by program name, project name, key word search, or any combination of these items.

The International Agreements module provides a common area for the Office of External Relations and SMD to share the status of international agreements. Parties involved with the agreements continually update a single text field with changes to status of the agreement.

The Inter-Agency Agreements module provides a common area for SMD to share the status of inter-Agency agreements.

The Requirements Management System provides access to the Level-1 requirements for each project and other key program and project documents approved at the directorate level. It also contains other top-level project information such as key personnel, and Directorate Program Management Council minutes and schedule

The milestones database tracks planned and actual schedule milestones for each SMD program or project. SMD leadership requires Program Executives (PEs) to regularly validate milestone dates. The application provides this check by recording “date last verified” for each milestone. Changes to milestone dates typically appear first in the weekly report to senior management; they are then incorporated into the Milestone Database.

NATS is a web-based database that tracks NRC study activity for SMD and records key correspondence and documentation for each study.

9.3 CORE FINANCIAL SYSTEMS

SMD employees with financial responsibilities use a number of NASA institutional financial systems to perform their jobs. These include the E-budget toolset and other related institutional financial systems. Other SMD employees have read-only access to view information from these systems.

9.3.1 The E-Budget Toolset

E-Budget is a web-based Agency-wide tool that houses related budget systems. These include the Metadata Manager (MDM), N2, the Integrated Budget and Performance Document (IBPD), and related Agency institutional financial systems.

MDM

MDM is a web-based tool that contains NASA’s official NASA Structure Management (NSM) data elements and associated codes. MDM is the only tool NASA relies on for identifying, creating, tracking, organizing, and archiving of appropriation, mission, theme, program, project, and Work Breakdown Structure (WBS) 2 through WBS 7 NSM structural elements. MDM feeds NSM codes to the budget formulation system, core financial system, and project management systems that require coding structure data.

The SMD budget integration team and each Division’s Program Support Specialist have access to MDM. SMD employees may view the NSM structure.

“N2”

N2 is the budget formulation tool for the Agency. It is used to formulate guidance to NASA Centers, incorporate NASA Center feedback, and capture final Agency submissions to both the Office of Management and Budget and the President. The budget team within SMD’s Management and Policy Division (MPD) has access to N2. The team works with their Division Directors and PEs to formulate the N2 budget content.

INTEGRATED BUDGET AND PERFORMANCE DOCUMENT

IBPD compiles program and project information for the annual budget submission to Congress. MPD’s budget team has access to the IBPD and works closely with their Division Directors and PEs to formulate the IBPD content.

9.3.2 Related Institutional Financial Systems

SMD employees use a number of other related Agency institutional financial systems to do their financial tasks. These include the following:

- The Integrated Enterprise Management Program (IEMP) is an Agency-wide program established to transform NASA's business systems and processes for improving NASA's fiscal and management accountability.
- SAP distributes the budget to NASA Centers and commit purchase requisitions
- Business Warehouse is a web-based reporting tool that uses defined reports to pull financial data from SAP.

9.4 NASA INSTITUTIONAL SYSTEMS

SMD employees use a number of NASA institutional systems that are not part of ScienceWorks. These systems are listed with their internet addresses in Appendix E. Functional organizations outside SMD manage and provide required training for these systems.

10.0 EDUCATION AND PUBLIC OUTREACH

10.1 INTRODUCTION

The goals for NASA Education are to:

- Strengthen NASA and the Nation's future workforce.
- Attract and retain students in the Science, Technology, Engineering, and Mathematics (STEM) disciplines.
- Engage Americans in NASA's mission.

The Science Mission Directorate (SMD) furthers these goals by proactively telling the stories of NASA science missions and research to make our work accessible to teachers, students, and the public.

This chapter discusses SMD's approach to its education and public outreach (E/PO) management. Section 10.2 summarizes NASA's education coordination framework as it relates to SMD, and Section 10.3 addresses key aspects of SMD's E/PO management.

10.2 NASA EDUCATION AND PUBLIC OUTREACH

The NASA Education Strategic Coordination Framework describes the portfolio approach to the collective agency effort undertaken by the Office of Education (OE) and the four NASA Mission Directorates: Science, Aeronautics, Exploration System, and Space Operations; and the specific, measurable outcomes that guide the portfolio. **Figures 10-1** shows the portfolio outcomes mapped to the NASA education strategic framework. These outcomes are described in Section 2.4 of the "Framework" document ("Philosophy and Principles that Guide the

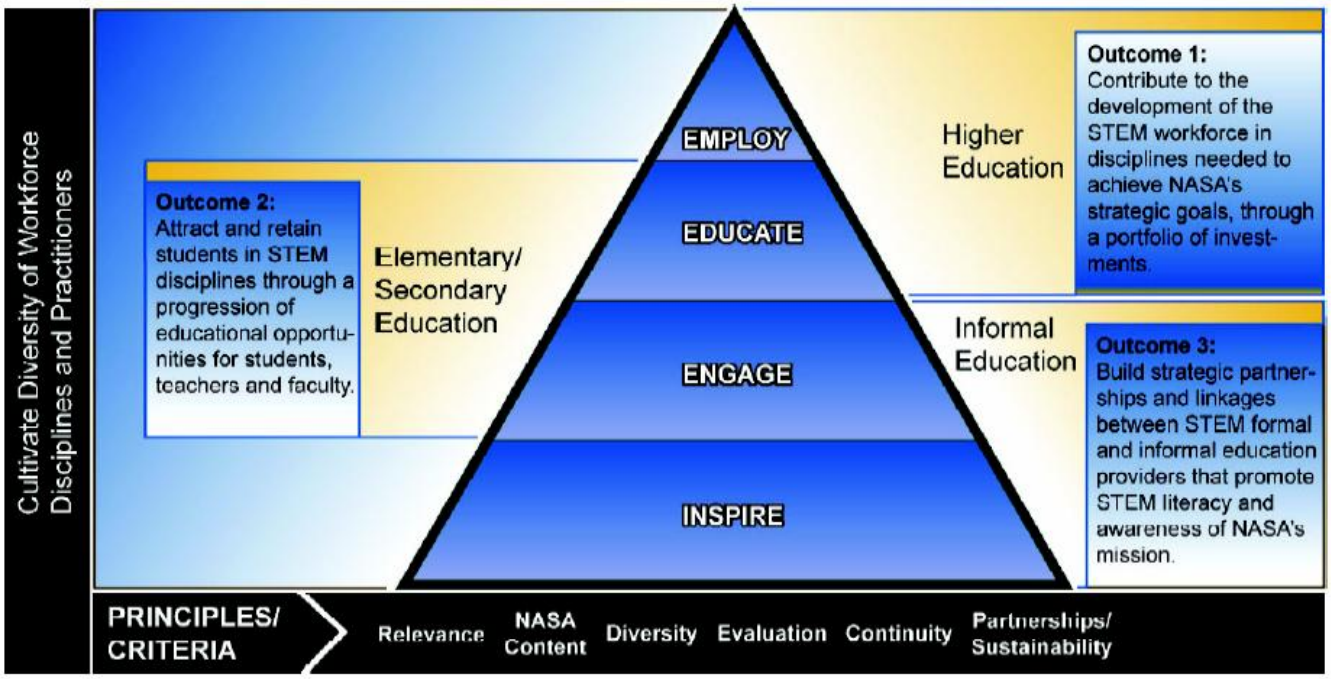

Figure 10-1. Outcomes Mapped to the Education Strategic Framework

Operation of the Portfolio") and Section 2.5 (*The Education Strategic Framework: The Total Picture*). The Office of Education portfolio is governed by NPR 7120.7, *Institutional/ Infrastructure Program/Project Management Processes and Requirements*.

The Education Coordination Committee (ECC) coordinates the directorate portfolio between OE and the four NASA Mission Directorates. The ECC, depicted in **Figure 10-2**, develops and implements the education strategic framework, and is responsible for:

- Developing the overarching Agency education strategic framework and policies to meet Agency needs.
- Ensuring implementation of an integrated portfolio and a coordinated investment strategy for education programs across NASA.
- Maintaining cognizance of all Agency education projects, major milestones, major evaluations/previews, and investment plans.
- Establishing criteria for education efforts and assess the results of those evaluations.

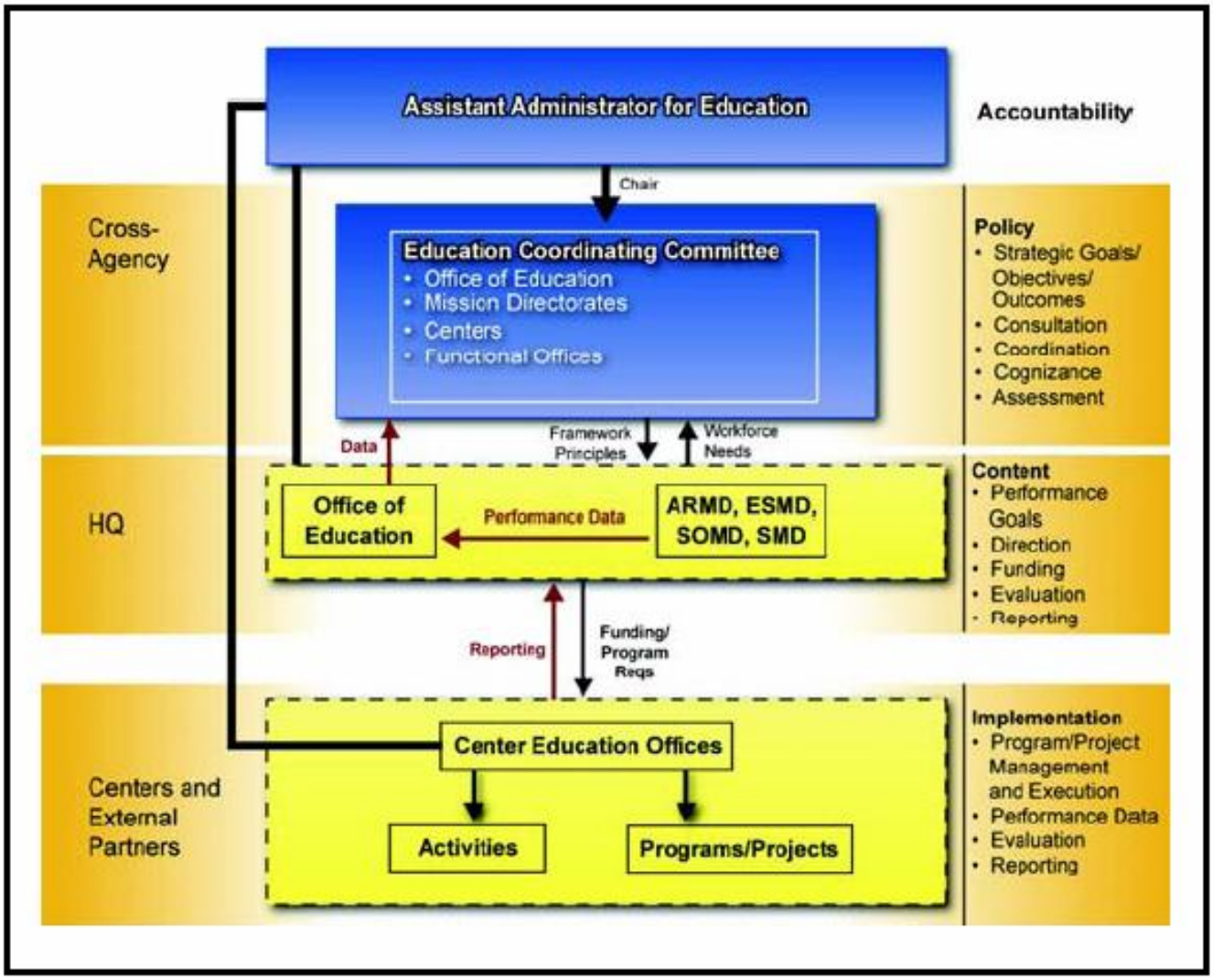

Figure 10-2. Education Portfolio Coordination Framework

Mission Directorate E/PO responsibilities are outlined in Section 3.1.3 of the "Framework" document, *Mission Directorates and Other Headquarters Funding Organizations*. In particular, Mission Directorates that fund educational efforts are responsible for:

- Embedding educational components into their research and development programs and flight missions.
- Administering the discipline/content-specific activities for which they provide funding.
- Ensuring meaningful collaboration between the NASA science/engineering community and the education community.

Each Mission Directorate supports the NASA education portfolio by providing discipline-specific content, funding, and human resources to plan and implement educational programs, projects, and services.

Each Mission Directorate also identifies an Education Lead who represents the Mission Directorate's Associate Administrator to OE and to the ECC. The Education Lead resides in Mission Directorate office space and works for the Mission Directorate. The Education Lead has the authority to commit resources and is directly responsible for:

- Program coordination with OE and the Centers
- Program evaluation using ECC criteria
- Performance data distribution to the central Agency education database.

10.3 SMD EDUCATION AND OUTREACH

SMD invests in E/PO by embedding E/PO in SMD flight missions and research and analysis (R&A) programs, and by funding E/PO activities selected through open solicitations. E/PO activities that fall within a flight program are under NASA Procedural Requirement (NPR) 7120.5, NASA Space Flight Program and Project Management Requirements, and are managed consistent with SMD management of flight programs (see Chapter 5, "Flight Program Management and Assessment). The remaining E/PO activities are under NPR 7120.8, *NASA Research and Technology Program and Project Management Requirements*, and are managed consistent with SMD management of R&A programs (see Chapter 4, "Research Program Management")

SMD seeks to insure coherence and promote interdisciplinary collaboration across SMD in its approach to E/PO. As such, SMD has adopted a management structure of distributed organizational responsibilities, as follows:

- The SMD E/PO Lead at the Directorate level is the Senior Advisor for Research and Analysis (SARA). The SMD E/PO Lead reports directly to the SMD Associate Administrator (AA) and is responsible for inter-Divisional matters.
- A Division E/PO Lead in the Management and Policy Division (MPD) and each of the four science divisions. The Division E/PO Leads represent the respective Division Directors and are responsible for the Division-specific E/PO activities.

The SMD E/PO Lead is responsible for:

- Representing the SMD AA to OE and the ECC
- Drafting SMD E/PO policy for the SMD AA's review and approval
- Developing and issuing E/PO solicitations as described in Section 4.2.4.1, "Soliciting Proposals through NRAs including ROSES."
- Directing Directorate-wide E/PO projects, initiatives, and activities and supporting Division-specific initiatives when needed
- Reviewing, concurring, providing findings, and making recommendations on Agency and SMD E/PO projects, initiatives, activities, and documents
- Integrating and coordinating E/PO activities across SMD for optimal performance
- Monitoring E/PO performance measures in support of Office of Management and Budget's Performance Assessment Rating Tool of NASA Education.

The Division E/PO Leads are responsible for:

- Representing respective Division Director to the integration and coordination at the Directorate level
- Taking the lead on Division-specific E/PO initiatives and activities
- Integrating and coordinating E/PO activities within their respective science division for optimal performance
- Maintaining cognizance of E/PO activities outside of their respective science division and promoting coherence across SMD.

Note that the programmatic functions reside primarily with the SMD E/PO Lead and the Division E/PO Leads. The MPD E/PO Lead is responsible for NASA internal coordination on communication and outreach and for SMD-wide conference support (See Section 11.2.4, "Conference Support" for further details).

The mission-embedded E/PO activities depend on the Program Executives (PEs) and/or Program Scientists (PSs) for their execution. The Division E/PO Leads serve as the resources for the PEs and PSs. The policy on the management of these activities is still to be developed at the time of this writing.

11.0 ADMINISTRATIVE AND POLICY PROCESSES

11.1 OVERVIEW

This chapter describes Science Mission Directorate (SMD) administrative and policy processes addressing:

- Operational and institutional activities such as travel, directives management, external audits management, and correspondence control
- Human capital management, such as training, Intergovernmental Personnel Agreements and performance planning
- Policy processes such as legislative affairs support and advisory committee management.

The individual responsible for the management of these activities retains the applicable training certificates, closed actions, and reports tracking – actual versus planned related to these activities.

Any questions regarding points of contact to assist the employee with the above administrative processes should be directed to the employee's local secretary. If the local secretary cannot provide the appropriate information, the employee should ask his or her direct line manager.

11.2 HEADQUARTERS OPERATIONS AND INSTITUTIONAL ACTIVITIES

The Management and Policy Division (MPD) manages or implements a number of Headquarters (HQ) operations and institutional activities in support of SMD. These include the institutional budget, travel, information technology (IT) support, and conference support. Other HQ operations and institutional activities the MPD is responsible for are implementation of NASA's telework policy, office space assignments, health and safety (H&S) initiatives, the SMD website, and launch guest operations.

11.2.1 Institutional Budget

The MPD plans and administers the SMD institutional budget. Working with the SMD Divisions, the MPD determines the fiscal year requirements and manages the administration of the funds.

The institutional budget includes:

- Travel (http://www.hq.nasa.gov/hq/travel.html)
- Training (http://www.hq.nasa.gov/hq/training.htm)
- Employee performance awards (http://nasapeople.nasa.gov/awards/agency_award_programs.htm)
- IT support and architecture, printing, and design (http://www.hq.nasa.gov/office/codec/PandD/)
- Conference support.

11.2.2 Travel

MPD manages the travel budget for SMD. In this capacity, the MPD conducts an annual call for travel plans by each employee and establishes budget guidelines for each Division and the front office. It also monitors the expenditure of funds against guidelines for each Division.

11.2.3 Information Technology Support

IT support covers a range of activities from employee desktops to computer servers. In this role, the MPD facilitates the procurement, upgrade, maintenance, and day-to-day operations required to carry out the business of the SMD. It also develops and manages the IT architecture to include infusion of new software, hardware, applications development, and maintaining compatibility with the NASA IT architecture.

11.2.4 Conference Support

The SMD Conference Support Office at the Goddard Space Flight Center (GSFC) supports conference and outreach activities for SMD. The office works closely with event organizers and sponsors and serves as the primary liaison for conference coordination.

The Conference Support Office:

- Facilitates regularly-scheduled meetings of the SMD events committee
- Serves as the primary point of contact for future events
- Collects and disseminates event-planning information
- Identifies and obtains necessary outreach material
- Oversees event logistics to ensure activities are on schedule and within budget
- Attends events as necessary to provide consultation, staffing, and logistical support services
- Designs and produces outreach material such as posters, brochures, annual SMD calendars, fact-sheets, and multimedia products.

11.2.5 Telework

The MPD is responsible for implementing the NASA telework policy for SMD. In this capacity, the MPD ensures Division Directors (DDs) have informed their employees of their telework rights and the process for requesting telework from their supervisor. The MPD also ensures supervisors understand how to document telework in the Federal government payroll system.

11.2.6 Office Space

The MPD manages the SMD office space. The MPD:

- Works with the HQ Space Office to identify and update the necessary footprint for SMD office space.
- Submits HQ ODIN [Outsourcing Desktop Initiative] New User Request System (HONURS) requirements for SMD employees, which includes identifying office space and ordering equipment.

- Approves/denies NHQ Form 224, NASA Headquarters Automated Systems Standard Access Request, which provides employee access to HQ computer servers and sets up E-mail accounts.

11.2.7 Health and Safety

The MPD manages the H&S of its employees. The MPD:

- Attends bi-monthly safety meetings and reports pertinent information to SMD staff
- Completes injury reports if employees are hurt on the job
- Serves as lead H&S monitor during emergencies and ensures all employees leave the building during evacuations
- Conducts an annual safety walk-through with the HQ safety officer
- When appropriate, submits requests to the appropriate HQ office to correct a H&S violation
- Makes recommendations to employees for the correction of H&S violations.

See http://www.hq.nasa.gov/hq/safety.htm for more information on H&S.

11.2.8 NPD/NPR Coordination

The NASA Policy Directive (NPD)/NASA Procedural Requirement (NPR) documents Agency and Center policies, procedures, and guidelines. They also provide Agency managers with the means to effectively and efficiently convey instructions to employees, customers, and suppliers. For NPDs and NPRs, the MPD:

- Defines the directive's expertise.
- Circulates the directive for review throughout SMD.
- Tracks and provides a concise overview of the comments through SMD's management structure for final SMD response to the NASA Online Directives Information Systems (NODIS) signature block.
- Ensures quality control and on-time delivery.

The MPD also provides the same service for directives in the "Open Review System" (ORS). The ORS is a web-based system for conducting pre-reviews of draft documents such as directives, white papers, and design review materials. The ORS allows originators to post draft documents. It also allows reviewers to evaluate a document before it enters the official NODIS process.

See http://nodis3.gsfc.nasa.gov/ for more information on NPDs.

11.2.9 Inspector General, General Accounting Office, and NASA HQ Management System Audits

The MPD manages audit activities and actions that relate to SMD for Inspector General (IG), General Accounting Office (GAO), or NASA HQ management system internal audits. The MPD:

- Reviews IG and GAO audits assigned to NASA to determine relevance to SMD or to determine the need for a SMD review.

- Logs in IG, GAO, or management system internal audit actions assigned.
- Coordinates with other SMD senior management regarding the designation of subject matter experts (SMEs) at HQ or a Center.
- Coordinates and assists SMEs with communications from the IG or GAO.
- Provides the SME with information and materials that will be used to conduct the audit of the SME.
- Schedules and attends entrance and exit conferences with the IG or GAO auditor.
- Coordinates responses with Program Executives (PEs), Center staff, or other Federal agencies.
- Ensures HQ or Center staff reviews and concurs with the draft report from the IG or GAO auditor.
- Coordinates concurrence of the draft report with the SMD.
- Provides to the IG or GAO the SMD response to the draft report.
- Advises SMD senior management, PEs, and/or Center staff of the final report and its disposition.
- Documents actions taken to respond to the final report.
- Reviews and comments on NPRs or other HQ policies regarding audits.
- Participates in HQ teams revising, developing, or implementing policies.

See http://www.hq.nasa.gov/office/oig/hq/org_chart.html for more information on IG, GAO, and NASA HQ management system audits.

11.2.10 Correspondence Control

This section describes how MPD addresses the tracking of HQ actions and Freedom of Information Act (FOIA) requests.

11.2.10.1 Headquarters Action Tracking System (HATS)

SMD responds to customer and stakeholder inquiries, requests, and complaints to incoming mail, non-conformance reports (NCR), and corrective actions (CA) resulting from NASA HQ management system audits. NASA and SMD use the Headquarters Action Tracking System (HATS) to track incoming interagency and intra-agency correspondence and associated actions. SMD can also create action items in HATS.

HATS tracks the following:

- **ADMINISTRATOR ACTIONS.** These are actions initiated from the Office of the Administrator. The executive secretariat creates Administrator-sponsored actions. These actions may be assigned to the Directorate.
- **ACTION DOCUMENT SUMMARIES.** These are actions from another HQ office requiring concurrence from the AA. These actions are assigned a HATS identification number and forwarded to appropriate DDs for review and comment before the AA concurs.
- **SMD ACTIONS.** These are actions originated by SMD as a result of formal correspondence received by SMD's Associate Administrator (AA) or a Deputy AA.

- **INFORMATION ONLY.** These are items not requiring a response, possibly resulting from correspondence or from disapproved CAs.
- **UNCONTROLLED ACTIONS.** These actions come from correspondence received from the Office of the Administrator and stamped “Uncontrolled." An "Uncontrolled" file is maintained for reference. These are letters answered once or twice, in which the author continues to make inquiries relative to the same subject matter. SMD may also create uncontrolled actions within HATS. Uncontrolled actions do not require a response.
- **NASA HQ MANAGEMENT SYSTEM ACTION NCRS.** These are action items associated with an NCR from a NASA HQ management system audit. The Office of Infrastructure, Management and HQ Operations, and Administration’s Management Systems Division (MSD) enters a NCR into the automated NCR system. Working with the SMD MSD the MPD Correspondence Control Officer determines when a HATS action needs to be created to reflect and track SMD’s response to an NCR.
- **NASA HQ MANAGEMENT SYSTEM ACTION CAS.** These are action items associated with an approved management system CA. HQ Procedural Guide 1280.3B, Management System Internal Audits, complaint and problem process governs the creation and processing of CAs. Unapproved CAs are entered as “Information Only. [See http://nodis3.gsfc.nasa.gov/HQDQMS_Docs/QMS/HQ_PG_1280_LD050_3_B_.pdf.]

11.2.10.2 FOIA Requests

All Federal agencies are required under FOIA, 5 U.S.C. 552, as amended, to disclose records requested by the public. Under the FOIA provisions, Federal agencies are to make their records available to the greatest extent possible, based on the principle of openness in government. NASA may, however, withhold information pursuant to certain exemptions and exclusions in the statute.

A written FOIA request can be submitted to NASA by mail, fax, E-mail, or in person, at the following addresses:

NASA Headquarters
300 E Street, SW
Room 9R35
Washington, DC 20546

(202) 358-2265 or (202) 358-0845 Voice
(202) 358-4331 Fax
E-mail: foia@hq.nasa.gov

No telephone requests are accepted. If the requestor does not know the exact title of the document(s), they should provide a reasonable description of the document(s).

The MPD:

- Logs the FOIA request into the HATS.
- Assigns the FOIA request to the appropriate SMD PE or Program Scientist to respond.
- Closes the HATS action when the FOIA response has been sent to the requesting individual (after approval by SMD management).

See http://www.hq.nasa.gov/office/pao/FOIA/main.html for more information on the FOIA process.

11.2.11 SMD Website

The SMD website addresses a broad range of customers including the general public, educators, kids, scientists, engineers, the press, international partners, and advocates for NASA programs. ScienceWorks is a set of web-enabled business applications that provide information on the status of SMD programs and allows for data sharing between SMD and its NASA internal (Centers) and external business partners (also see Section 9.2, ScienceWorks Web Portal).

The MPD is responsible for managing the application.

11.2.12 Launch Guest Operations

The MPD coordinates launch guest operations for SMD. Launch guest operations support public and industry attendance at NASA's expendable launch vehicle and Shuttle launches and landings.

NASA Centers provide invitee lists for input to the guest operations database. The guest operations database is a shared tool on the NASA Internal network. The Office of Public Affairs manages the database. The database is also used for visitor badges and confirmation of attendance at launches.

Each NASA office or directorate receives a special guest quota and nomination criteria memorandum.

Once the AA reviews and approves the nominations, the names are entered into the database.

Nominators can make nominations no later than one week prior to launch and must provide the names and addresses of each domestic guest. International guests must provide citizenship information.

The Office of Public Affairs Guest Services Branch mails invitations on a weekly basis until one week prior to a launch. Invitees are responsible for travel and lodging.

11.3 HUMAN CAPITAL

The following sections describe SMD processes to provide human capital support for:

- Recruitment and personnel actions
- Performance and incentive awards
- Performance appraisals
- Leadership development and training
- Senior Executive Service (SES) positions
- Intergovernmental Personnel Agreement (IPA) appointment and detailees

11.3.1 Recruitment and Personnel Actions

MPD's Human Capital Specialists are responsible for SMD recruitment. Once SMD management determines that a position needs to be filled, the Human Capital Specialist initiates an SF-52 action in the Federal Personnel Payroll System (FPPS). FPPS is a web tool used for initiating, requesting, and authorizing personnel actions. The necessary documents to process a vacancy announcement include: a Position Description (PD), PD coversheet, position sensitivity designation form, drug testing form, organization chart, and other supporting documentation as appropriate.

The supervisor reviews, approves, and signs the PD coversheet and forwards the documents to the Human Resource Management Division (HRMD).

Once HRMD reviews and approves the request, the SMD supervisor receives a draft vacancy announcement for review, change, and/or approval.

Vacancy announcements are advertised on the NASAJOBS and the Office of Personnel Management's (OPM) USAJOBS websites for at least five days.

Once the vacancy announcement closes, the HRMD accepts job applications. The supervisor is forwarded the applications of qualifying applicants. The supervisor is given 30 days to interview and select a candidate.

Once the supervisor has made his/her selection, the Human Capital Specialist forwards the name to the HRMD to make a tentative offer to the employee candidate.

After the HRMD completes an internal audit of the selection, the HRMD makes a final offer to the selectee and establishes a report date for the selectee to report to NASA.

The Agency Human Capital website provides additional information at http://nasapeople.nasa.gov/fp_index.htm.

11.3.2 Performance and Incentive Awards

The NASA Awards Program recognizes employees who make outstanding contributions to the Agency mission. The DD is responsible for ensuring that the right employees are recognized for their efforts. However, the AA has final approval of all award nominations.

The NASA Awards and Incentive Program includes a wide spectrum of both cash and non-cash awards available to all NASA civil servants.

Additional information on NASA Awards is at the Human Capital website: http://nasapeople.nasa.gov/awards/default.htm.

11.3.3 Performance Appraisals

The Employee Performance Communication System (EPCS) is NASA's performance management system for all employees other than SES, Senior Scientific and Technical, and Senior Level employees. The EPCS establishes a systematic process for planning, monitoring, developing, assessing, and rewarding employee performance that contributes to the achievement of the Agency's Vision, mission, and goals in accordance with applicable laws and regulations. The EPCS creates a strategically linked set of performance expectations for

all employees, promotes a performance culture that focuses on two-way communication and accountability for results, and clearly differentiates between high and low performers.

Additional information regarding Performance Management is at the Human Capital website: http://nasapeople.nasa.gov/perform/pm.htm.

11.3.4 Leadership Development and Training

At the beginning of the Agency's annual employee performance cycle (May 1 – April 30), each SMD employee may write an Individual Development Plan (IDP) and negotiate this plan with his/her supervisor. The IDP includes short- and long-range employee goals, planned training and development activities, and relevant justification. IDP forms are available electronically at http://ohcm.gsfc.nasa.gov/DevGuide/Hq/Executive/nhq251.pdf.

The SMD training coordinator:

- Distributes guidance for individual development planning
- Identifies training opportunities such as NASA Center-level courses and HQ points-of-contact for on-the-job training
- Assists employees with the application/registration for developmental training
- Manages the training budget
- Maintains training records for each employee.

SMD employees obtain training/coursework forms from the SMD training coordinator. Employees complete System for Administration, Training, and Educational Resources (SATERN) Form 1735 to be approved by their supervisor and then the training coordinator critiques and approves each training request for processing through procurement at the NASA Shared Services Center. SATERN Form 1735 can be found at https://satern.nasa.gov and can be used for both internal and external training for all types of training.

See http://www.hq.nasa.gov/hq/training.htm for more information on leadership development and training.

11.3.5 SES Positions

The SES is comprised of individuals who possess well-honed executive skills and share a broad perspective of government and a public service commitment that is grounded in the Constitution. The keystone of the Civil Service Reform Act of 1978, the SES was designed to be a corps of executives selected for their leadership qualifications.

The AA is responsible for establishing the performance elements and requirements in consultation with the executive and consistent with the goals and performance expectations in NASA's strategic planning initiatives. The AA proposes the initial summary rating, based on both individual and organizational performance, and taking into account customer satisfaction and employee perspective.

The Performance Review Board reviews the executive's initial summary rating. The agency head (or his/her designee) determines the executive's annual summary rating.

Additional information regarding SES performance planning is at the Human Capital website: http://nasapeople.nasa.gov/ses/index.htm.

11.3.6 IPA Appointments and Detailees

IPA assignees come to NASA by appointment or detail. The IPA provides for the assignment of employees from academia and state and local governments to positions within Federal agencies where the assignments provide mutually beneficial arrangements. In addition, detailees can be assigned to or from other Federal agencies. Assignment agreements can be made for up to two years. OPM can grant two-year extensions to an assignment through a written request from the Agency head or their designee. Two-year extensions can be granted for a total of six years.

An IPA agreement is the authorizing document required for every appointment or detail. NASA, the non-Federal entity, and the employee sign the agreement. Because IPAs are not NASA employees, no personnel action is processed.

The NASA Desk Guide on IPAs contains guidelines on how to write an agreement. It is available at: http://nasapeople.nasa.gov/references/NDG11_IPA.pdf. The complete IPA agreement contains:

- IPA certification letter
- IPA checklist
- OPM Optional Form 69, Assignment Agreement
- Conflict of interest acknowledgement
- Tax liability acknowledgement
- Position sensitivity designation
- Budget spreadsheet

The MPD receives the IPA agreement from the IPA's home organization and ensures that adequate funds are available to support the assignment. This includes forwarding a copy of the agreement to the HQ Accounting Office at GSFC to get its approval that funds are available. After confirming funds are available, the MPD forwards the package to the SMD AA for approval. If approved by the SMD AA, a copy of the IPA agreement is forwarded HRMD. For assignments involving HQ employees or positions, the MPD sends a copy of the agreement to the Director of the Accounting Division in the HQ Operations Office.

IPAs and their NASA supervisors must be mindful of potential conflicts of interest with the IPA's home institution. The criminal ethics and financial interest statutes, especially 18 USC §208 apply to IPAs. Supporting SMD policy is SPD-05, Preventing Financial Conflicts for IPA Employees.

11.4 POLICY PROCESSES

11.4.1 Congressional Activities

The MPD manages legislative activities and actions that relate to SMD for Office of Legislative and Intergovernmental Affairs (OLIA). OLIA assigns one or more of its personnel to follow SMD activities. Working with this person(s), the MPD:

- Reviews legislation and actions from Congress assigned to NASA to determine relevance to SMD or to determine the need for a SMD review.
- Logs in OLIA actions assigned.
- Coordinates with other SMD senior management regarding the designation of subject matter experts (SMEs) at HQ.
- Coordinates and assists SMEs with communications from OLIA.
- Provides the SME with information and materials that will be used to prepare the draft response.
- Schedules and attends briefings and hearings, and associated prep sessions, with SMD senior management, SMEs, and OLIA.
- Coordinates concurrence of the draft response with the SMD.
- Provides to the OLIA the SMD draft response for HQ and/or Center review.
- Documents actions taken to prepare the draft report.

11.4.2 External Communications

The MPD assists the SMD Front Office in their external communications, including speeches and briefings to a wide variety of external audiences. The MPD also manages SMD presence at conferences, such as the annual meetings of the major scientific professional societies, by arranging for such things as an SMD booth and displays. MPD also develops visual materials and graphic arts products in both hard copy and electronic media.

11.4.3 Advisory Committee Management

The MPD manages SMD support to the NASA Advisory Council and its Committees and Subcommittees. This includes the Executive Secretariat for the NASA Advisory Council (NAC) Science Committee, the coordination of the Executive Secretariats of the Subcommittees, and the administrative processes associated with the appointment of new members and management of Subcommittee meetings. Steps include:

- Maintaining Subcommittee rosters
- Requesting members fill out financial disclosure Form 450s
- Facilitating appointment letters
- Submitting Federal Register notices at least 30 days prior to Subcommittee meetings
- Managing the meeting logistics contractor

APPENDICES

Appendices **A-1**
Appendix A. Policy and Procedure Resources **A-2**
A.1 Research Management A-2
A.1.1 SMD Policy Documents A-2
A.1.2 Additional Resources A-2
A.1.3 Referenced Material A-3
Appendix B. SMD Charters **A-4**
B.1 Directorate Program Management Council A-4
B.2 Science Management Council (SMaC) of the Science Mission Directorate A-21
Appendix C. Sample Documentation **A-23**
C.1. Sample Formulation Authorization Document A-23
C.2. Sample Program Delegation Letter A-28
C.3. Sample Project Authorization Letter A-29
C.4. Sample Program-level Requirements Appendix A-30
Appendix D. Technology Readiness Levels **A-35**
Appendix E. SMD Management Handbook Web Site References **A-36**
Appendix F. Glossary Of Acronyms **A-39**

APPENDIX A. POLICY AND PROCEDURE RESOURCES

Policy and procedure references for SMD Handbook are included in this appendix.

This appendix will be expanded in a subsequent update to provide references for the entire document. The references from Chapter 4, Research Program Management, are examples of what will be developed.

A.1 RESEARCH MANAGEMENT

Program Officers and other research managers should follow the current SMD policies and procedures. These policies and procedures are found in the following locations.

A.1.1 SMD Policy Documents

SMD Policy Documents (SPDs) are available in the “SMD Policy Documents” folder on the SMD server. This folder includes both formal SPDs (these have numbers) as well as policy and procedural memos.

A.1.2 Additional Resources

- NASA Policy Documents (NPDs) and NASA Procedural Requirements (NPRs) are found in the NASA Online Directives Information System (NODIS). See Appendix E, “SMD Management Handbook Website References” for the NODIS website reference.
- NASA procurement regulations, which govern NASA’s broad agency announcements like AOs, CANs, and NRAs including ROSES, are found in the NASA Federal Acquisition Regulations (FAR) Supplement (NFS) Website (See Appendix E, “SMD Management Handbook Website References”). In general, Part 1835 contains regulations that apply to NRAs including ROSES, and Part 1872 contains regulations that apply to AOs.
- RAPTOR has online User Guides and Step-by-Step Guides. To access them, click on the question mark icon ( ) in the upper right corner of most pages. See Appendix E, “SMD Management Handbook Website References” for the RAPTOR website reference.
- External NSPIRES has a substantial amount of online documentation tutorials and other useful reference materials. To access them, click on “Help” in the upper right corner of most pages. See Appendix E, “SMD Management Handbook Website References” for the NSPIRES website reference.
- Internal NSPIRES will have documentation including training modules. See Appendix E, “SMD Management Handbook Website References” for the NSPIRES website reference.

A.1.3 Referenced Material

Reference	SMD Handbook Section(s)
The Science Plan for NASA's Science Mission Directorate 2007-2016	4.2
The Guidebook for Proposers Responding to a NASA Research Announcement	4.2, 4.2.4.1, 4.2.4.2, 4.2.4.3
NPR 1080.1A, Requirements for the Conduct of NASA Research and Technology	4.2, 4.2.4
NPR 5800.1, The Grant and Cooperative Agreement Handbook\	4.2.4.1, 4.2.4.3, 4.2.7.2.1, 4.2.7.3
NPR 5810.1, Standard Format for NASA Research Announcements (NRAs) and other Announcements for Grants and Cooperative Agreements	4.2.4.1, 4.2.4.1.1, 4.2.5.1
NPR 7120.5, NASA Program and Project Management Processes and Requirements	4.2.7.2
NPR 7120.8, NASA Research and Technology Program and Project Management Requirements	4.1, 4.2, 4.2.2, 4.2.3, 4.2.4, 4.2.4.1.1, 4.2.4.1.2, 4.2.4.2, 4.2.5, 4.2.5.5, 4.2.5.6, 4.2.7.2
NASA FAR Supplement	4.2.4.1.1, 4.2.4.1.3, 4.2.7.3, 4.4.2
NSPIRES website	4.2.4.1.1, 4.2.6.1
Grants.gov website	4.2.6.2
RAPTOR website	4.2.6.3
NODIS website	4.4.2
SPD-01A, Handling Conflicts of Interest for Peer Reviews	4.2.4.2
SPD-02, Handling Late Proposals	4.2.4.2
SPD-04, Handling Unsolicited Proposals	4.2.7.3, 4.2.7.4
SPD-06, Handling Reductions in Research Program Budgets	4.2.4.1.2
SPD-07, Science Mission Directorate Integrated NASA Post-Doctoral Program (NPP) Plan	4.2.7.2.2
SPD-08, Requirements for Selection Decision Documents for NASA Research Announcements including ROSES	4.2.4.2
SPD-09, Requesting Reconsideration of NRA Proposal Declination	4.2.4.2
SPD-memo, Procedures for the Use of Foreign Reviewers for AO Proposals.	4.2.4.2
SPD-memo, OER Review of SMD Research Proposals that have International Participation	4.2.4.2

APPENDIX B. SMD CHARTERS

B.1 DIRECTORATE PROGRAM MANAGEMENT COUNCIL

National Aeronautics and Space Administration
Headquarters
Washington, DC 20546-0001

JUL 1 1 2007

Reply to Attn of: Science Mission Directorate

TO: Distribution

FROM: Associate Administrator for Science Mission Directorate

SUBJECT: Directorate Program Management Council (DPMC)

The purpose of this memorandum is to formalize and document the establishment of the Directorate Program Management Council (DPMC) for the Science Mission Directorate. The Deputy Associate Administrator for Programs, Mr. Todd May, will chair the DPMC. Mr. May will be responsible for presenting the results of deliberations in the DPMC to me for final disposition.

The DPMC shall serve as the primary forum in the Directorate for carrying out the responsibilities of the Directorate for program and project oversight and approval outlined in NASA Procedural Requirements 7120.5D section 2.4, and for providing programmatic direction to Centers as described in NASA Policy Directive 1000.0, section 5. The activities of the DPMC are normally limited to flight programs and projects. However, I may ask the DPMC to consider special topics as I see fit. The DPMC does not provide oversight and approval for research and analysis, project selections, or technology development activities, except to the extent that the latter is embedded in flight programs and projects.

Details concerning functions, membership, and other fundamental policy concerning the DPMC are in the enclosed Charter for the Council.

Colleen N. Hartman
for S. Alan Stern

Enclosure

Distribution:

Science Mission Directorate/Colleen Hartman
- Jon Morse
- Rick Howard
- Richard Fisher

- Mike Freilich
- Bryant Cramer
- Jim Green
- Jim Adams
- Roy Maizel

NASA Center Directors:

- ARC/Simon Warden
- DFRC/Kevin Petersen
- GRC/Woodrow Whitlow
- GSFC/Ed Weiler
- JPL/Charles Elachi
- JSC/Michael Coates
- KSC/Bill Parsons
- LaRC/Lesa Roe
- MSFC/David King
- SSC/Richard Gilbrech

cc:
Space Operations Mission Directorate/Bill Gerstenmaier
Exploration Systems Mission Directorate/Scott Horowitz
Aeronautics Mission Directorate/Lisa Porter
Chief Engineer/Chris Scolese
Program Analysis and Evaluation/Scott Pace
Chief Safety and Mission Assurance Officer/Bryan O'Connor:
Chief Financial Officer/Terry Bowie
Associate Administrator for Procurement/Tom Luedtke

CHARTER

Program Management Council
Of the
Science Mission Directorate

July 5, 2007

1. Purpose

This charter establishes the Directorate Program Management Council (DPMC) as a council of the NASA Science Mission Directorate (SMD) and sets forth its functions, membership, and meetings.

2. Applicability

This charter applies to the Science Mission Directorate at NASA Headquarters.

3. Establishment

The DPMC shall provide advice, findings, and recommendations to the SMD Associate Administrator (AA) to enable the Directorate to meet its goals and objectives. The activities of the DPMC are normally limited to flight programs and projects. However, the SMD AA may ask the DPMC to consider special topics as he sees fit. The DPMC does not provide oversight and approval for research and analysis, project selections, or technology development activities, except to the extent that the latter is embedded in flight programs and projects.

4. Functions

a. The DPMC shall serve as the primary forum in the Directorate for carrying out the responsibilities of the Directorate for program and project oversight and approval outlined in NPR 7120.5D section 2.4, and for providing programmatic direction to Centers as described in NPD 1000.0, section 5.

b. DPMC meetings may be for informational purposes only (informational meeting), or for purposes of arriving at a Directorate-level decision (decisional meetings). In cases where a decision is

required to be taken by the Mission Directorate, the DPMC shall make a recommendation for action to the SMD AA.

c. Detailed operating procedures for the DPMC are described in DAAP Policy Document #002, dated July 5, 2007.

5. Membership

a. The Chairman of the DPMC shall be the Deputy Associate Administrator for Programs as delegated by the SMD Associate Administrator.

b. Additional members of the DPMC include the following personnel:
   1) Director of the Heliophysics Division
   2) Director of the Planetary System Division
   3) Director of Astrophysics Division
   4) Director of the Earth Science Division
   5) Director of Management and Policy Division
   6) HQ Safety and Mission Assurance representative
   7) SMD Chief Engineer (from the Office of the Chief Engineer)
   8) SMD Chief Scientist

c. The following are also invited to participate in meetings of the DPMC:
   1) SMD Associate Administrator and Deputy Associate Administrator
   2) Deputy Division Directors and Program Directors
   3) Program Executive, Program Scientist and Program Analyst
   4) Deputy Chief Scientists
   5) HQ Launch Services Program representative
   6) Program Assessment and Evaluation office representative
   7) Program and project managers for subject program/project
   8) Host Center management representative(s) for subject program/project
   9) Other SMD Front Office Staff
   10) SMD OGC embed
   11) SMD PAO embed
   12) Office of Legislative Affairs representative
   13) Office of External Relations representative

d. Other attendees must be approved in advance by the Deputy AA for Programs. Participation by telecon is not permitted unless authorized in advance.

e. Division Directors may delegate their participation in DPMC meetings to their official Deputies when a schedule conflict exists. Any

organizational representative, other than those stated above, must be coordinated in advance.

f. The chairman may call for an executive session at any time; an executive session shall consist of only the DPMC members, the SMD AA and Deputy, and others specifically approved by the chairman.

6. Meetings

Authority to schedule a DPMC meeting will be provided by the DAA for Programs. Scheduling will be performed by the DPMC Secretariat.

7. Minutes, Actions and Decisions

Action items will be recorded, and minutes prepared by the Program Executive. These will be routed for approval by the affected Division, DAAP, DAA, and AA. Resulting decisions by the AA will be documented in a formal letter to affected parties.

8. Duration

The DPMC is a standing Council of the SMD and shall remain in existence until this notice is cancelled by the AA of the SMD.

Science Mission Directorate
Deputy Associate Administrator – Programs
Flight Programs Policy Document # 002 – Directorate Program Management Council (DPMC)
July 5, 2007

1. Purpose

1.1 The purpose of this document is to describe SMD policy for preparing, conducting, and recording meetings of the DPMC.

1.2 References:
(1) NPR 7120.5D, section 2.4
(2) NPD 1000.0, section 5.0
(3) SMD DPMC Charter
(4) SMD Management Handbook

2. Background

2.1 The Science Mission Directorate implements the NASA Strategic Plan and national priorities through research and analysis activities, technology development activities, education and outreach activities, and flight programs and projects. The DPMC provides the Directorate with top-level oversight and approval for flight programs and projects funded by the Directorate, and for other (non-flight) programs and projects as assigned by the SMD AA.

2.2 The DPMC serves as the primary forum in the Directorate for carrying out the responsibilities of the Directorate for program and project oversight and approval outlined in reference (1), and for providing programmatic direction to Centers as described in reference (2). The SMD AA has established basic authority and ground rules, including membership, for the DPMC in reference (3). The DPMC does not provide oversight and approval for research and analysis, technology development, or education and outreach activities, except to the extent that these are embedded in flight programs and projects.

3. Program/Project Management

3.1 The focus of the DPMC is the management of high value investments in space flight missions. Flight projects have a well-defined end result, and well-defined cost and schedule parameters for obtaining the end result, as opposed to research and analysis and technology development activities, where the objective is to push the state of the art or the bounds of knowledge as far as possible with the available budget. Programs, which achieve their objectives through projects, are higher-level, strategic approaches to meeting Directorate mission needs, based often on thematic properties or a common acquisition approach.

3.2 The management approach utilized by the DPMC (and defined in NPR 7120.5D) is one of reducing risk in a project through a series of "phases", by clearly defining the end result and cost and schedule parameters (Phases A and B), completing a detailed design , constructing the end product and placing it into an operational state, (Phases C and D), operating the mission and producing science data for research and analysis activities (Phase E) and concluding with decommissioning/disposal (Phase F).

4. Types of Meetings

4.1 DPMC meetings may be for informational purposes only (informational meeting), or for purposes of arriving at a Directorate-level decision (decisional meetings).

	Decisional	**Informational**
Result	Recommendation for AA approval	Information only
Documentation	• decision memorandum signed by the AA • minutes of the meeting • presentation materials • list of attendees	presentation materials and attendees only
Examples	• KDP approvals • Re-baseline • Readiness for critical events (e.g., landings, sample returns) • Project termination/continuation • Readiness for presentation to Agency PMC • Approval of SMD programs budget	• status updates • closure of action items • discussion of new initiatives prior to program formulation • topics of special interest

4.2 A DPMC is not required for the following flight program/project decisions, responsibility for which is delegated to Division Directors:

- Project decisions and authorizations for Category 3 projects (including AO release and selections)
- Mission extensions beyond prime phase
- Termination of operating missions, in accordance with NPD 8010.3A
- Post-launch mission transition to full science operations (must include OCE and OSMA participation)

5. Requirements for DPMC Meetings

5.1 Requirements for DPMC meetings need to be adapted to fit the purpose of the meeting. Minimum requirements for the most common DPMC meetings, project Key Decision Points (KDPs), are described in detail below. Requirements for other DPMC meetings will generally follow the approach described below (documentation required prior to the meeting, meeting agenda, post-meeting actions), and will be determined by the requesting Division Director and the Deputy AA for Programs prior to the meeting.

5.2 Other types of DPMC meetings include informational DPMC meetings, program KDPs, special events (landings, sample returns, etc), preparation for an Agency PMC (other than project KDPs described below), and approval of the SMD programs budget.

6. Roles of the Program Executive and DPMC Secretariat

	Program Executive	Secretariat

Pre-meeting actions	• Obtains DAAP approval to schedule the meeting
	  ○ Coordinates scheduling the meeting with Secretariat
	  ○ Provides names of requested attendees other than standard list
	  ○ Works visitor clearance issues as needed
	• Provides draft briefing materials to AA, Deputy AA, DAAP, and Secretariat at least 5 calendar days prior to the meeting
	• Provides documentation required by DAAP policy 002 to Secretariat at least 3 calendar days prior to meeting
	• Organizes and conducts pre-DPMC briefing with DAAP and Division Director at least one calendar day prior to the meeting
	• Publishes agenda
	• Verifies project office and SRB briefings comply with direction in DAAP policy 002
	• Arranges for duplication and distribution of briefing hard copies at the meeting
		• Generates and coordinates meeting notice
		• Reserves conference room and AV support as needed
		• Maintains DPMC master schedule
		• Verifies that draft briefing materials and all DAAP policy 002 documentation is available within times required (if not, postpones meeting with DAAP concurrence)

Conducting	• Provides meeting overview, introduces	• Collects attendee list

the meeting	speakers, summarizes action items, etc	
Post-meeting actions	• Prepares documentation as required by DAAP policy 002 and other DPMC direction ○ Provides draft to DAAP within 14 calendar days of meeting ○ Provides final documentation to Secretariat within 30 calendar days of meeting	• Loads meeting documentation into RMS • Tracks delinquent documentation

7. Specific Requirements for Project Key Decision Points (KDPs)

7.1 KDP-A (non-AO projects only)

7.1.1 Documents required to prior to the meeting

- Signed Formulation Authorization Document
- Draft Standing Review Board (SRB) Terms of Reference (ToRs) for the formulation phase
- Science Definition Team (SDT) report from the Mission Concept Review
- Final Acquisition Strategy Planning Meeting report/decision memorandum
- Draft Level 1 Requirements
- Draft AA decision memorandum

7.1.2 Meeting agenda

7.1.2.1 Project office briefing to cover the following

- Mission overview
- Management approach for formulation
- Overview of draft Level 1 Requirements
- Resources required and phasing for formulation phase
- Plan and schedule for formulation activities
- Description of risks for formulation phase and plans for retirement of risk during formulation
- Description of risks to remain for development phase and initial plans for retirement of risk during development
- Description of any long-lead development work (parts acquisition, fabrication) to begin prior to KDP-C with detailed cost and schedule, and performance management plans (e.g., EVM)
- Preliminary estimate of project Life Cycle Cost
- Preliminary proposed Launch Readiness Date

7.1.2.2 SDT briefing to provide an assessment of the ability of the concept/approach to achieve the scientific objectives

7.1.2.3 Readiness assessments from Program Office and/or Center

7.1.2.4 DPMC discussion

7.1.2.5 DPMC actions

- Recommendation for AA action: for example, approval of entry into Phase A as presented, or with specified changes to the

recommendations presented, with action items assigned and conditions stipulated as needed

7.1.3 Post-meeting actions

7.1.3.1 First draft of minutes: due to DAA-Programs within 14 calendar days of the meeting

7.1.3.2 All final meeting documentation: loaded into RMS within 30 calendar days of the meeting

- Decision memorandum signed by the AA
- Minutes of the meeting
- Presentation materials
- List of attendees

7.1.3.3 Status of action item resolution: presented at monthly Flight Program Reviews as part of the Program Executive briefing

7.2 KDP-B

7.2.1 Documents required prior to the meeting

- Baselined Level 1 Requirements
- Signed Formulation Authorization Document (if revised/updated post-KDP-A)
- Signed Standing Review Board (SRB) Terms of Reference (ToRs)
- SRB reports from the System Requirements Review and Mission Definition Review
- Final Acquisition Strategy Meeting report/decision memorandum
- Preliminary Project Plan
- Draft AA decision memorandum

7.2.2 Meeting agenda

7.2.2.1 Project office briefing to cover the following

- Overview of mission concept and mission design
- Management approach for Phase B
- Description of project requirements and changes since KDP-A, linkage to Directorate and Agency strategic planning documents
- Resources required and phasing for Phase B
- Plan and schedule for Phase B activities
- Description of risks for Phase B and plans for retirement of risk during Phase B
- Description of risks to remain for development phase and initial plans for retirement of risk during development
- Description of any long-lead development work (parts acquisition, fabrication) to begin prior to KDP-C with detailed cost and schedule, and performance management plans (e.g., EVM)
- Revised estimate of the project Life Cycle Cost at the 70% confidence level
- Preliminary top-level project schedule
- Description of any waivers to NPR 7120.5D expected to be requested at KDP-C

7.2.2.2 SRB briefing to cover the following

- Description of SRB KDP-B review process
- Assessment of project office approach, discussion of any unresolved issues
- Verification of completion of the activities described in NPR 7120.5D, paragraph 4.4, and readiness for KDP-B of project documents listed in NPR 7120.5D, tables 4-3 and 4-4
- Verification of compliance with the FAD, other previous Directorate authorizations/direction, and program documentation
- Recommendation for future SMD decision points and criteria for continuation in Phase B
- Summary of risk to be accepted by the Directorate as a result of approval to enter Phase B

7.2.2.3 Program Executive assessment of project compliance with the requirements of the SMD Handbook, particularly paragraph 5.4.2.2

7.2.2.4 Readiness assessments from Program Office and Center Management Council

7.2.2.5 DPMC discussion

7.2.2.6 DPMC actions

- Recommendation for AA action: for example, approval of entry into Phase B as presented, or with specified changes to the recommendations presented, with action items assigned and conditions stipulated as needed

7.2.3 Post-meeting actions

7.2.3.1 First draft of minutes: due to DAA-Programs within 14 calendar days of the meeting

7.2.3.2 All final meeting documentation: loaded into RMS within 30 calendar days of the meeting

- Decision memorandum signed by the AA
- Minutes of the meeting
- Presentation materials
- List of attendees

7.2.3.3 Status of action item resolution: presented at monthly Flight Program Reviews as part of the Program Executive briefing

7.3 KDP-C

7.3.1 Documents required prior to the meeting

- Signed updated Level 1 Requirements
- NEPA documentation (if required)
- Final updated Program Plan and PCA
- Final Interagency and International agreements (as applicable)
- Signed Standing Review Board (SRB) Terms of Reference (ToRs) (if revised/updated post-KDP-B)
- SRB report from the Preliminary Design Review
- Baseline Project Plan

- Draft AA decision memorandum

7.3.2 Meeting agenda

7.3.2.1 Project office briefing to cover the following

- Overview of mission concept and mission design
- Management approach for development
- Description of project requirements and changes since KDP-B, linkage to Directorate and Agency strategic planning documents
- Resources required and phasing for development at WBS level 2 at the 70% confidence level
- Plan and schedule for development activities
- Description of risks for the development phase and plans for retirement of risk during development
- Description of risks to remain for the operations phase and initial plans for retirement of risk during operations
- Description of accepted risks for the development and operations phases
- Risk-based justification for cost, schedule and scope reserves (scope reserves = de-scope plan)
- Description of any waivers requested to NPR 7120.5D

7.3.2.2 SRB briefing to cover the following

- Description of SRB KDP-C review process
- Assessment of project office approach, including executability of the Project Plan, discussion of any unresolved issues
- Verification of completion of the activities described in NPR 7120.5D, paragraph 4.5, and readiness for KDP-C of project documents listed in NPR 7120.5D, tables 4-3 and 4-4
- Verification of compliance with the FAD, other previous Directorate authorizations/direction, and program documentation
- Recommendation for future SMD decision points and criteria for continuation in development
- Summary of risk to be accepted by the Directorate as a result of approval to enter development

7.3.2.3 Program Executive assessment of project compliance with the requirements of the SMD Handbook, particularly paragraph 5.4.5

7.3.2.4 Readiness assessments from Program Office and Center Management Council

7.3.2.5 DPMC discussion

7.3.2.6 DPMC actions

- Recommendation for AA action: for example, approval of entry into development as presented, or with specified changes to the recommendations presented, with action items assigned and conditions stipulated as needed

7.3.3 Post-meeting actions

7.3.3.1 First draft of minutes: due to DAA-Programs within 14 calendar days of the meeting

7.3.3.2 All final meeting documentation: loaded into RMS within 30 calendar days of the meeting

- Decision memorandum signed by the AA
- Minutes of the meeting
- Presentation materials
- List of attendees

7.3.3.3 Status of action item resolution: presented at monthly Flight Program Reviews as part of the Program Executive briefing

7.4 KDP-D

7.4.1 Documents required prior to the meeting

- SRB reports from the Critical Design Review and System Integration Review
- Draft AA decision memorandum

7.4.2 Meeting agenda

7.4.2.1 Project office briefing to cover the following

- Overview of mission concept and final mission design
- Management approach for Phase D
- Description of project requirements and changes since KDP-C, linkage to Directorate and Agency strategic planning documents
- Resources required and phasing for Phase D at WBS level 2 at the 70% confidence level
- Plan and schedule for Phase D activities
- Description of risks for Phase D and plans for retirement of risk during Phase D
- Description of risks to remain for Phase E and initial plans for retirement of risk during Phase E
- Description of accepted risks for Phases D and E
- Risk-based justification for cost, schedule and scope reserves (scope reserves = de-scope plan)
- Final Incompressible Test List
- I&T flow chart, showing planned order and schedule of testing
- Description of any waivers requested to NPR 7120.5D

7.4.2.2 SRB briefing to cover the following

- Description of SRB KDP-D review process
- Assessment of project office approach, discussion of any unresolved issues
- Verification of completion of the activities described in NPR 7120.5D, paragraph 4.6, and readiness for KDP-D of project documents listed in NPR 7120.5D, table 4-4
- Verification of compliance with the Level 1 Requirements, the Project Plan, other previous Directorate authorizations/direction, and program documentation
- Recommendation for future SMD decision points and criteria for continuation in Phase D

- Summary of risk to be accepted by the Directorate as a result of approval to enter Phase D

7.4.2.3 Readiness assessments from Program Office and Center Management Council

7.4.2.4 DPMC discussion

7.4.2.5 DPMC actions

- Recommendation for AA action: for example, approval of entry into Phase D as presented, or with specified changes to the recommendations presented, with action items assigned and conditions stipulated as needed

7.4.3 Post-meeting actions

7.4.3.1 First draft of minutes: due to DAA-Programs within 14 calendar days of the meeting

7.4.3.2 All final meeting documentation: loaded into RMS within 30 calendar days of the meeting

- Decision memorandum signed by the AA
- Minutes of the meeting
- Presentation materials
- List of attendees

7.4.3.3 Status of action item resolution: presented at monthly Flight Program Reviews as part of the Program Executive briefing

7.5 KDP-E (old MRB)

7.5.1 Documents required prior to the meeting

- Signed Certificate of Flight Readiness
- SRB report from the Operational Readiness Review
- Signed Contingency Plan
- Draft AA decision memorandum

7.5.2 Meeting agenda

7.5.2.1 Project office briefing to cover the following

- Overview of mission concept and mission design
- Management approach for Phase E
- Description of project requirements and changes since KDP-D, linkage to Directorate and Agency strategic planning documents
- Summary of test and verification program status
- Description of remaining open work and schedule to complete
- List of open paper highlighting all launch constraints
- Schedule of remaining meetings and reviews
- Schedule of PAO activities
- Resources required and phasing for Phase E
- Schedule for Phase E
- Description of all open risks (including accepted risks) and mitigation plans (for other than accepted risks)
- Description of any waivers requested to NPR 7120.5D

7.5.2.2 SRB briefing to cover the following

- Description of SRB KDP-E review process
- Assessment of project office approach, discussion of any unresolved issues
- Verification of completion of the activities described in NPR 7120.5D, paragraph 4.7, and readiness for KDP-E of project documents listed in NPR 7120.5D, table 4-4
- Verification of compliance with the Level 1 Requirements, the Project Plan, other previous Directorate authorizations/direction, and program documentation
- Recommendation for any future SMD decision points needed during Phase E
- Summary of risk to be accepted by the Directorate as a result of approval to enter Phase E

7.5.2.3 Readiness assessments from Program Office and Center Management Council

7.5.2.4 DPMC discussion

7.5.2.5 DPMC actions

- Recommendation for AA action: for example, approval of entry into Phase E as presented, or with specified changes to the recommendations presented, with action items assigned and conditions stipulated as needed

7.5.3 Post-meeting actions

7.5.3.1 First draft of minutes: due to DAA-Programs within 14 calendar days of the meeting

7.5.3.2 All final meeting documentation: loaded into RMS within 30 calendar days of the meeting

- Decision memorandum signed by the AA
- Minutes of the meeting
- Presentation materials
- List of attendees

7.5.3.3 Status of action item resolution: presented at monthly Flight Program Reviews as part of the Program Executive briefing

7.6 Termination/Continuation Review

7.6.1 Required when there is reasonable cause to believe that a project cannot meet its Level 1 cost, schedule and scope requirements

7.6.2 Actions required prior to a termination/continuation review

7.6.2.1 Request for termination/continuation review must be approved by the Division Director, DAA-Programs, and MDAA

7.6.2.2 Special SRB ToRs prepared and signed

7.6.2.3 SRB review conducted

7.6.2.3.1 Analysis of current project position, and determination of project's ability to meet Level 1 Requirements

7.6.2.3.2 If SRB assessment is that project can meet Level 1 requirements, SRB findings are presented to DPMC and DPMC assesses need for further action

7.6.2.3.3 If SRB assessment is that project cannot meet Level 1 requirements

7.6.2.3.3.1 SRB determines causes of inability to meet requirements, identifies alternative strategies for proceeding with the project, defines cost (at 70% confidence level), schedule, scope and risk for each alternative identified, and impact to science requirements and strategic Directorate objectives

7.6.2.3.3.2 Alternatives may include complete termination, return to the formulation phase, or revision of Level 1 Requirements and completion of development

7.6.3 Meeting agenda

7.6.3.1 Project office briefing covering technical, cost and schedule risk

7.6.3.2 SRB briefing to cover the following

7.6.3.2.1 Assessment of ability of project to meet Level 1 requirements

7.6.3.2.2 Description of alternative solutions, including cost (at 70% confidence level), schedule, scope and risk for each alternative, and impact to science requirements and strategic Directorate objectives

7.6.3.3 Project office response to SRB findings and recommendations

7.6.3.4 Program office and Center comments

7.6.3.5 Division Director assessment of alternatives and recommendation for DPMC/AA action

7.6.4 DPMC discussion

7.6.5 DPMC action: three alternatives for recommendation for AA approval

7.6.5.1 Terminate the project (Termination KDP), subject to conditions of NPR 7120.5D, paragraph 2.5.5:

7.6.5.1.1 Category 1 projects and Programs: the MDAA provides recommendations to the Decision Authority on the need for a termination KDP. The Decision Authority commissions an independent assessment, and following its completion, the governing PMC holds a Termination Review.

7.6.5.1.2 Category 2 projects: the Decision Authority notifies the NASA Associate Administrator at least 45 days in advance of a termination KDP

7.6.5.1.3 Category 3 projects: the Decision Authority notifies the NASA Associate Administrator at least 21 days in advance of a termination KDP

7.6.5.2 Return the project to the formulation phase, subject to new KDP-B based on existing documentation to the extent possible, updated to reflect changes, to establish new formulation parameters

7.6.5.3 Complete the project, subject to new KDP-C, based on existing documentation to the extent possible, updated to reflect changes, to establish new development and operations baseline

7.6.6 Post-meeting actions

7.6.6.1 First draft of minutes: due to DAA-Programs within 14 calendar days of the meeting

7.6.6.2 All final meeting documentation:

7.6.6.2.1 Reviewed with the NASA Associate Administrator prior to final implementation (project termination only – NPR 7120.5D paragraph 2.5.6)

7.6.6.2.2 Loaded into RMS within 30 calendar days of the meeting

- Decision memorandum signed by the AA
- Minutes of the meeting
- Presentation materials
- List of attendees

7.6.6.3 Status of action item resolution: presented at monthly Flight Program Reviews as part of the Program Executive briefing

B.2 SCIENCE MANAGEMENT COUNCIL (SMaC) OF THE SCIENCE MISSION DIRECTORATE

CHARTER
SCIENCE MANAGEMENT COUNCIL (SMaC)
OF THE
SCIENCE MISSION DIRECTORATE (SMD)
10 APRIL 2007

1. Purpose

This charter establishes the Science Management Council (SMaC) as a council of the NASA Science Mission Directorate (SMD) and sets forth its functions, membership, and meetings.

2. Applicability

This charter applies to the Science Mission Directorate at NASA Headquarters.

3. Establishment

The SMaC shall provide advice, findings, and recommendations to the SMD Associate Administrator (AA) to enable the Directorate to meet its strategic goals and objectives.

4. Functions

a. The SMaC shall serve as the strategic science and program steering committee for the Directorate, including overseeing the development of Directorate-level solicitations and integrating science priorities, strategic initiatives, and programmatic implementation strategies.

b. The SMaC shall provide a forum for assessment of Directorate-level research, mission, and instrument solicitation policies, programs, processes, priorities, and practices.

c. The SMaC shall recommend, to the selection official, selections for Directorate-level competitions, including: Announcements of Opportunity, Directorate-level NASA Research Announcements, Requests for Proposal where selection is assigned to NASA Headquarters, and down-selections for mission and instrument competitions including Missions of Opportunity.

d. The SMaC shall meet in plenary, as needed, with other Mission Directorates and NASA Centers to provide a forum for communicating the SMD program to, and coordinating the SMD program with, other Mission Directorates and NASA Centers.

e. The Chair of the SMaC shall transmit each finding, recommendation, or general advice from the SMaC to the SMD AA for consideration.

f. The AA, will as appropriate transmit the final SMD SMaC determination to the appropriate parties.

5. Membership

a. The Co-Chairs of the SMaC shall be the SMD AA (AA) and the SMD Chief Scientist (CS).

b. Additional members of the SMaC include the following SMD personnel:

- DAAs and AAAs

- The Science Policy, Process, and Ethics Chief (SPECC)
- Director of the Heliophysics Division
- Director of the Planetary System Division
- Director of the Astrophysics Division
- Director of the Earth Science Division
- Director of the Management and Policy Division
- Senior Advisor for R&A (SARA)

c. The invited additional attendees to plenary meetings of the SMaC include the following:

- Embedded Office of General Council Attorney
- Science Director, Ames Research Center
- Science Director, Goddard Space Flight Center
- Science Director, Jet Propulsion Laboratory
- Science Director, Marshall Space Flight Center
- Science Director, Johnson Space Center
- Science Direction, Langley Research Center
- AA, Space Operations Mission Directorate
- AA, Exploration Systems Mission Directorate
- AA, Aeronautics Research Mission Directorate
- Chief of Strategic Communications
- AA, Safety and Mission Assurance
- AA, Legislative Affairs

d. The co-chairs and the SMD AA may invite additional attendees to participate in all or part of any SMaC meeting as required.

e. AAs, SMD Division Directors, and the SMD Chief Scientist may delegate their participation in SMaC meetings to their official Deputies when a schedule conflict exists. Any organizational representative, other than those stated above, must be approved by the Deputy AA.

f. Chief Scientist will be represented by a designated Deputy when the Chief Scientist is not available for the SMaC.

g. The co-chairs may call for an executive session at any time; an executive session shall consist of only the SMaC members and the SMD AA or their designated representatives.

h. The SPPEC shall serve as Executive Secretary for all SMaC meetings to record recommended actions.

6. Meetings

The SMaC will meet biweekly as determined by the co-chairs. The SMD will additionally meet as needed to consider selection recommendations in a timely manner.

7. Duration

The SMaC is a standing Council of the SMD and shall remain in existence until this notice is cancelled by the AA of the SMD.

APPENDIX C. SAMPLE DOCUMENTATION

C.1. SAMPLE FORMULATION AUTHORIZATION DOCUMENT

FORMULATION AUTHORIZATION DOCUMENT (FAD)
FOR THE JUNO PROJECT
OF THE NEW FRONTIERS PROGRAM

SAMPLE

APPROVED BY:

Name **Science Mission Directorate Associate Administrator**	**Date**
Name **New Frontiers Program Manager**	**Date**
Name **Juno Principal Investigator [*If PI-mode mission*]**	**Date**

CONCURRED BY:

Name **Science Division Director**	**Date**
Name **Program Director [*if applicable*]**	**Date**
Name **Juno Program Executive**	**Date**
Name **Juno Program Scientist**	**Date**

SAMPLE

1.0 PURPOSE

Juno's measurements address science objectives central to three NASA Science divisions: Planetary Science, Heliophysics, and Astrophysics. Juno's primary science goal of understanding the formation, evolution and structure of Jupiter is directly related to the conditions in the early Solar System, which led to the formation of our planetary system. The Juno goals trace primarily to the planetary objective from the 2006 NASA Strategic Plan to: "Learn how the Sun's family of planets and minor bodies originated and evolved." It also responds to the Heliophysics objective to "Understand the fundamental physical processes of the space environment from the Sun to the Earth, other planets, and beyond to the interstellar medium." The Juno mission was a high-priority, medium-class, mission in the 2003 planetary science decadal survey and also high priority in the 2003 Heliophysics decadal survey.

2.0 AUTHORITY

The Juno mission is a Principal Investigator (PI) led mission within the New Frontiers Program, with day-to-day project management responsibility delegated to the Jet Propulsion Laboratory (JPL). The New Frontiers Program Office located at Marshall Space Flight Center (MSFC) is responsible for overall program management. The New Frontiers Program is a program of the Planetary Science Division within the Science Mission Directorate at NASA Headquarters.

The Juno mission was proposed under the 2003 New Frontiers Announcement of Opportunity (03-OSS-03). In May of 2005 the mission was selected as the second New Frontiers mission, and was given authority to proceed into formulation phase.

3.0 PROJECT GOALS AND OBJECTIVES

The objective of the Juno Phases A and B is to put in place the necessary project content to ensure a successful Preliminary Design Review (PDR) and Confirmation. The goal for Phase B is to develop a very mature set of requirements and designs as well as mitigate key risk areas by taking advantage of a formulation phase which has been lengthened from the original Concept Study Report (CSR) due to a directed launch delay.

3.1 TIMEFRAME

The Juno Phase B will be formally concluded at the Confirmation Review. The Confirmation will take place within three months of the conclusion of the Preliminary Design Review (PDR), subject to logistical constraints. The scheduled date for the PDR is shown in the Juno project schedule to be in May 2008, and is given in section 7.0. The CDR is scheduled for March 2009, Integration & Test for March 2010, and launch in August of 2011.

3.2 SCOPE OF WORK

The Juno project will generate all products for Phase B required by NPR7120.5D, including Cost Analysis Data Requirement (CADRe) documents. The Juno Phase B activities include the development and maturation of the project requirements and completion of key trade studies, including those listed in **Table 1**, to mitigate risk to the mission and solidify designs and requirements. Other deliverables in Phase B include the completion of key documents, some of which are noted in **Table 2**.

Table 1. Key Phase B Trade Studies

Stellar Reference Unit (SRU) study contracts
Solar Cell testing
Early costing estimates for Phase C/D
Propellant tank configuration trade study
Radiation vault layout and material trades (thermal analysis)
Spacecraft wobble control approach
Spacecraft spin rate
Attitude knowledge and reconstruction for perijove approach
Telemetry format during Jupiter orbit insertion
Deep Space Maneuver link margin recovery
Jupiter arrival date flexibility
Mass margin recovery
Energy margin recovery
Assessments of potential Italian Space Agency contributions
Cost vs. Benefit analysis of next generation ground data system
Low Data Rate frame size and link margins (cruise link margin recovery)
Earth Fly-by thermal impacts and payload operations
Solar Array deployment and LV separation timing
RCS Engine location (plume impingement study)
Solar array switching unit elimination
Cruise and main engine burn spin-rate for optimum propellant budget

Table 2. Key Phase B Document Products

Program Level Requirements Appendix (PLRA) (Project Level 1 requirements)
Juno Project Plan
Juno Project Implementation Plan
Juno Risk Management Plan
Juno Mission Assurance Plan
Planetary Protection Category Letter

4.0 INTERNAL PARTICIPANTS

The Juno project is wholly funded by the Science Mission Directorate through the New Frontiers Program line. JPL has been delegated day-to-day project management responsibility by the PI. The Goddard Space Flight Center (GSFC) provides the Deputy PI, and is also responsible for providing one of the science payload instruments. The project will also work with the Launch Services Program at Kennedy Space Center (KSC) to secure an expendable launch vehicle for access to space.

SAMPLE

5.0 External Participants

The Principal Investigator is employed by the Southwest Research Institute (SwRI), which is also responsible for providing two of the science payload instruments, contract management of the science team, and development of the science operations center.

There are no international partners involved in the Juno mission, however, foreign contributions may be considered early in Phase B in accordance with the recommended guidelines from the Planetary Science Subcommittee. The Juno science team includes a number of foreign co-investigators.

6.0 Funding

The Juno Phase B budget profile through fiscal year 2008 is shown in **Table 3**. The formal end of Phase B is marked by Confirmation, which will occur at the end of the third quarter or during the fourth quarter of fiscal year 2008, depending on scheduling constraints. The total expenditure, assuming Confirmation occurs at three months post-PDR, is estimated at $186,290K.

Table 3. Phase B Budget Profile by Fiscal Year

Fiscal Year:	FY05	FY06	FY07	FY08	Total
Budget ($K):	$3,426	$36,247	$67,501	$79,116	$186,290

7.0 Reviews

A listing of key milestone reviews planned to take place during the Juno mission Phase B is shown in **Table 4**. Project internal reviews and Program Office assessments are not shown. An independent review board will be established to conduct the Key Decision Point Reviews.

Table 4. Juno Phase B Reviews

Review	Planned Date
Preliminary Mission Systems Review (PMSR)	May 22, 2007
Preliminary Design Review (PDR)	May 13, 2008
Non-Advocate Review (NAR) (concurrent with PDR)	May 13, 2008
Confirmation Review (KDP-C)	No Later Than Aug 15, 2008 (goal is PDR + 1 month)

Note: *This FAD has been modified from the actual Juno document to better illustrate the content of a FAD for this Handbook. See the Requirements Management System (RMS) for the actual document and for other examples.*

SAMPLE

C.2. SAMPLE PROGRAM DELEGATION LETTER

SMD

Date

TO: ***Center Name***
Attn: Center Director

FROM: Associate Administrator for the Science Mission Directorate

SUBJECT: Assignment of Host Center Responsibility for the **XX** Program

Consistent with the Agency's policy to locate program management responsibility at the Field Centers, ***Center Name*** is assigned the host center responsibility for the **XX** program office. The **XX** program will report to me through the **YY** Science Division within the Science Mission Directorate (SMD) and will consist of the content identified in the attached Program Formulation Authorization Document (FAD).

You are requested to recommend a candidate Program Manager, with documented relevant experience, to SMD by ***date*** for approval. Once the Program Manager is approved, he or she will be given 30 days to develop a Program Plan for executing this responsibility, developed according to the requirements in NPR 7120.5, and submit it to SMD for approval. During this time, the Program Manager must coordinate with the **YY** Science Division to incorporate the top-level requirements on the Program. In implementing this host center responsibility, ***Center Name*** will be responsible for providing center resources (including facilities and staffing), technical authority, and financial management capabilities to the Program Office to assist the Program Manager in accomplishing the program goals identified in the enclosed FAD. The Program Manager will be responsible for tracking program metrics and reporting status to NASA Headquarters.

In accordance with the NASA Strategic Management and Governance Handbook, NASA Headquarters will retain responsibility for defining program policy, establishing the science and technology requirements, soliciting and selecting the science investigations, allocating the program budget, establishing key milestones, establishing program and project top-level requirements and metrics, and providing assessment of the program and its financial status to senior Agency management. NASA Headquarters will also retain the responsibility for establishing the formal agreements with other U.S. Government organizations and with foreign space organizations and institutions.

Thank you for accepting this responsibility. We look forward to initiating a successful program.

S. Alan Stern

Enclosure

C.3. SAMPLE PROJECT AUTHORIZATION LETTER

SMD

Date

TO: ***Center Name***
Attn: Center Director
Attn: **XX** Program Manager

FROM: Associate Administrator for the Science Mission Directorate

SUBJECT: Authorization to Initiate the **ZZ** Project in the **XX** Program

Based on the successful concept studies performed by the **XX** Program Office and the **ZZ** pre-project, the successful selection of the **ZZ** science investigations, and the satisfaction of all NPR 7120.5 Key Decision Point A requirements, you are hereby authorized to initiate Phase A of Formulation for the Project. The approved Formulation Authorization Document (FAD) is attached. You are directed to work with the **YY** Science Division within SMD to initiate this project and to develop appropriate tracking metrics.

The guidelines and constraints for the **ZZ** project are as follows. The project includes both Formulation and Implementation, (Phases A through E) as well as funding for the launch vehicle, data analysis, project operations, education, and outreach. Prime mission operations should end ***N1*** years after launch. The project should include ***N2*** years of data analysis in its budget. Funding should target not to exceed ***$N3*** million for all elements of the project through the prime mission. The **XX** Program should set aside contingency funding for a ***N4***-year extended mission in the eventuality the spacecraft and instruments remain in functional order at the end of prime mission. Launch should be targeted for ***date***. The **ZZ** project will be executed under the direction of the **YY** Science Division. It is anticipated that the project will be implemented as a NPR 7120.5 Category ***N5*** project.

A preliminary Non-Advocate Review (PNAR) will precede the Initial Confirmation Review that SMD will hold at the Key Decision Point to determine whether the project is ready for Phase B. This review will include a life cycle cost estimate for the project as directed by Congress. The NAR results will be presented to the governing Program Management Council (PMC) to seek approval for the formal transition of the project into Phase B. Subsequently, near the end of Phase B, a Non-Advocate Review (NAR) and similar approval will be necessary to further transition from Formulation to Implementation.

I look forward to a successful **ZZ** mission.

S. Alan Stern

C.4. SAMPLE PROGRAM-LEVEL REQUIREMENTS APPENDIX

NOTE: *This example is a generic template. Many examples of actual Program-level requirements documents can be found in the web-based Requirements Management System (RMS).*

APPENDIX _N_ TO THE _XX_ PROGRAM PLAN

PROGRAM-LEVEL REQUIREMENTS ON THE _ZZ_ PROJECT

(Suggested wording is shown in normal text; wording can be changed as necessary, but retain the essential content. Guidance is shown in italics. Items requiring replacement or selection are contained inside ***<< >>*** *markers.)*

1.0 SCOPE

This appendix to the **<<program name >>** Program Plan identifies the mission, science and programmatic (funding and schedule) requirements imposed on the **<<name of the organization having prime responsibility>>** for the development and operation of the **<<project name >>** Project of the **<<program name >>** Program. Requirements begin in Section 4. Sections 1, 2 & 3 are intended to set the context for the requirements that follow.

This document serves as the basis for mission assessments conducted by NASA Headquarters during the development period and provides the baseline for the determination of the science mission success following the completion of the operational phase.

Program authority is delegated from the Associate Administrator for the Science Mission Directorate (AA/SMD) through the **<<SMD division name >>**Science Division within SMD to the **<<program name >>** Program Manager within the Flight Projects organization at **<<center name>>**.

The **<<science organization name>>**, under contract to **<<contracting organization>>**, is responsible for the scientific success of the **<<project name >>** Project, utilizing the set of approved co-investigators reflected in the proposal including any approved changes prior to the release of this appendix.

The **<<organization name>>**, under contract to **<<contracting organization>>**, is responsible for design, development, test, mission operations, and data verification tasks and shall coordinate the work of all contractors and co-investigators.

Changes to information and requirements contained in this document requires approval by the Science Mission Directorate, NASA Headquarters by the same signatories that approved the original.

2.0 SCIENCE DEFINITION

2.1 BASELINE SCIENCE OBJECTIVES

This section provides a brief, high level description of the mission science objectives, in terms of the fundamental questions, the overall objectives, and the science goals, as defined in the NASA Science Plan. For AO-type missions, the accepted proposal should be a primary source for this section.

2.2 SCIENCE INSTRUMENT SUMMARY DESCRIPTION

This section will provide a very brief, high level description of what science instruments will be used to satisfy the mission objectives. (2-3 sentences per instrument is typical.)

3.0 PROJECT DEFINITION

3.1 PROJECT ORGANIZATION & MANAGEMENT

This section describes the organizational relationships proposed for the development and operation of the mission.

3.2 PROJECT ACQUISITION STRATEGY

This section briefly describes the proposed acquisition approach for the Project's components. The description should include the spacecraft, scientific instruments, launch vehicle, and operations. If applicable, the acquisition of mission critical components should also be briefly described.

4.0 PROGRAMMATIC REQUIREMENTS

(The following sections identify required content. The specific organization is not intended to be restrictive. Paragraphs can be renumbered and reorganized, provided that required content is retained.)

4.1 SCIENCE REQUIREMENTS

4.1.1 BASELINE SCIENCE REQUIREMENTS

This section shall describe the scientific requirements that must be achieved in order to fully satisfy the baseline science objectives. Requirement statements should be concise and clearly stated in a form suitable for objective verification. The document, either here or in another section, must state which of these baseline requirements must be met to satisfy the full mission success criteria.

4.1.2 THRESHOLD SCIENCE REQUIREMENTS

This section shall describe the threshold (or minimum) scientific requirements (the "science floor") that are required to scientifically justify performing the mission. Requirement statements should be concise, succinct, and suitable for objective verification. The document must state, either here or in another section, which of these minimum requirements must be met to satisfy the minimum mission success criteria.

4.1.3 SCIENCE INSTRUMENT REQUIREMENTS

This section shall specify what is crucial about the instrument that must be present to accomplish the mission objectives. This may include the scientific measurements required to be accomplished with each instrument, and/or the critical science instrument design and required operating capabilities for accomplishing these measurements. State only requirements for which failing to meet the requirement would jeopardize meeting the mission objectives.

4.2 MISSION AND SPACECRAFT PERFORMANCE

This project shall be Category **<<1, 2 or 3>>** per NPR 7120.5D, and the mission class shall be **<< A, B, C, or D>>** per NPR8705.4.

This paragraph shall specify particular mission or spacecraft performance requirements that constitute the Mission Success Criteria and are thus critical in successfully meeting the scientific requirements of the mission. Mission lifetime should be specified herein, as well as particular performance features which are mission critical.

4.3 LAUNCH REQUIREMENTS

This payload shall be launched on an expendable launch vehicle of Risk Category **<< 3, 2 or 1>>** or higher, per NPD 8610.7C.

This section shall define launch requirements such as the launch time frame, launch window, the spacecraft orbit, and/or the method for achieving launch and orbit insertion, as applicable.

4.4 GROUND SYSTEM REQUIREMENTS

This section shall specify particular ground system design or performance requirements that are critical in meeting the science objectives of the mission.

4.5 MISSION DATA REQUIREMENTS

4.5.1 SCIENCE DATA MANAGEMENT

The **<<project name>>** Principal Investigator(s) shall be responsible for initial analysis of their data, its subsequent delivery to an appropriate data repository, the publication of scientific findings, and communication of results to the public. Additionally, the **<<project name>>** Principal Investigator(s) shall be responsible for collecting engineering, and ancillary information necessary to validate and calibrate the scientific data prior to depositing it in a NASA approved data repository. The time required to complete this process shall be the minimum necessary to provide accurate and complete scientific data to the science community and the general public. The **<<project name>>** science data base shall be made available to the science community without restrictions or proprietary data rights of any kind.

4.5.2 DATA MANAGEMENT PLAN

The **<<project name>>** Project shall develop a data management plan to address the total activity associated with the flow of science data, from acquisition, through processing, data product generation and validation, to archiving and preservation. The data management plan shall be formally approved as a Level 2 requirement no later than the Project's Critical Design Review. Science analysis software development, utilization, and ownership shall be covered in the Data Management Plan.

5.0 NASA MISSION COST REQUIREMENT

5.1 COST CAP

<<project name>> funding is capped at a cost of **<< N >>** dollars for the design, development, and operation of the mission. *(Include wording to indicate what is included in the cost cap, e.g., whether or not launch vehicle costs or data analysis costs are included.)*

5.2 COST MANAGEMENT AND SCOPE REDUCTION

Provided that Program Level Requirements are preserved, and that due consideration has been given to the use of budgeted contingency and planned schedule contingency, the **<<project name >>** shall pursue scope reduction and risk management as a means to control cost. The Project Plan shall include potential scope reductions and the time frame in which they could be implemented. If other methods of cost containment are not practical, the reductions identified in the Project Plan may be exercised; however, any reduction in scientific capability, including those reductions specifically identified in the Project Plan, shall be implemented only after consultation with and approval by the Program Scientist. Any potential scope reductions affecting these Program Requirements shall be agreed to by the signers of this document.

6.0 MULTI-MISSION NASA FACILITIES

This section shall define the Program's intended use of multi-mission NASA facilities, and include a definition of how the use of these facilities will be funded. Negotiated agreements or draft agreements with defensible cost estimates shall be supplied at the Confirmation Review for KDP-C.

7.0 EXTERNAL AGREEMENTS

This section will define the external organizations that the project is dependent upon for mission success. Program requirements supported by these agreements shall be clearly identified.

8.0 PUBLIC OUTREACH AND EDUCATION

The **<<project name >>** project shall develop and execute an Education and Public Outreach Plan consistent with SMD requirements for the class of project.

9.0 SPECIAL INDEPENDENT EVALUATION

Specification of any independent evaluation is a Program requirement which should be defined for a Project only if there are unique factors which would call for a correspondingly unique independent evaluation. An example would be situations in which the science is compelling enough to warrant embracing exceptional technical risk, to the extent that HQ would require a special independent evaluation. Ordinary independent reviews are required by existing directives and need not be specifically called out in this appendix to the Program Plan.

10.0 WAIVERS

This section must document, either explicitly or by reference to an approved waiver, any NPR 7120.5 requirements or processes which the project is either eliminating or substantially modifying at the Project level. Program level waivers of NPR 7120.5 requirements should not be repeated in this document.

11.0 REQUIRED APPROVALS AND CONCURRENCES

APPROVALS: (*SET BY NPR 7120.5*)

Program Manager
Center Director
SMD Associate Administrator

CONCURRENCES: (*OTHERS CAN BE ADDED*)

Principal Investigator
Project Scientist
Project Manager
Program Executive
HQ Program Scientist
HQ Science Division Director
SMD Chief Engineer
Deputy Associate Administrator for Programs

APPENDIX D. TECHNOLOGY READINESS LEVELS

Technology Readiness Levels (TRLs) are a systematic metric/measurement system that supports assessments of the maturity of a particular technology and the consistent comparison of maturity between different types of technology. The TRL approach has been used on-and-off in NASA space technology planning for many years and has been incorporated into relevant documentation addressing integrated technology planning at NASA.

Figure D-1, "Technology Readiness Levels," provides a summary view of the technology maturation process model for NASA space activities for which the TRLs were originally conceived; other process models may be used. However, to be most useful the general model must include:

- Basic research in new technologies and concepts (targeting identified goals, but not necessary specific systems).
- Focused technology development addressing specific technologies for one or more potential identified applications.
- Technology development and demonstration for each specific application before the beginning of full system development of that application.
- System development through first unit fabrication.
- System 'launch' and operations.

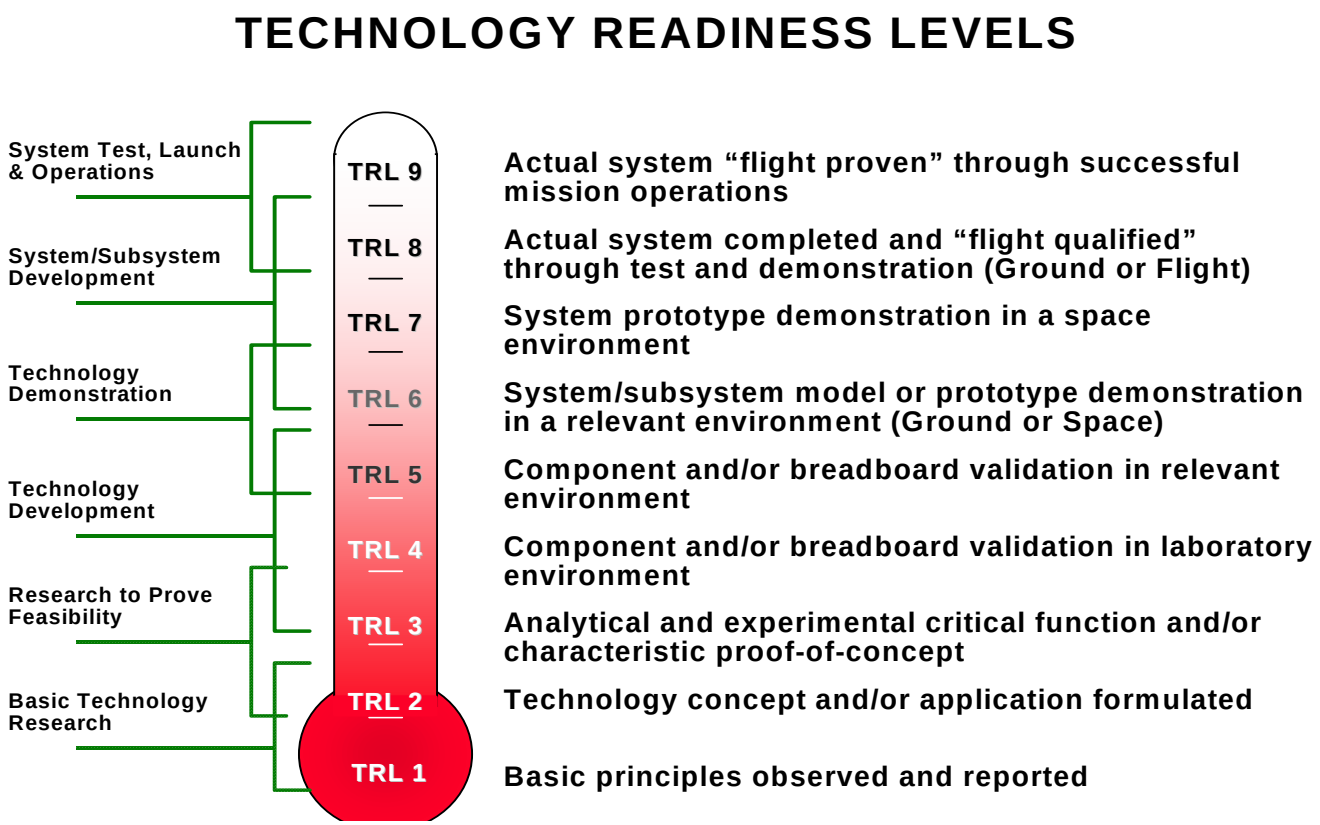

Figure D-1. Technology Readiness Levels

APPENDIX E. SMD MANAGEMENT HANDBOOK WEB SITE REFERENCES

	Site Name	Description	URL
1	Academy of Program/Project & Engineering Leadership (APPEL)	This is the home page for NASA's APPEL offiice. It contains information on the internal course offerings available to NASA employees.	http://appel.nasa.gov/
2	Employee Performance Communication System (EPCS)	The Employee Performance Communication System (EPCS) is NASA's performance management system for all employees other than Senior Executive Service, Senior Scientific and Technical, and Senior Level employees.	http://nasapeople.nasa.gov/perform/
3	Headquarters Training and Development *HQ Employee Development Guide*	This is the "front end" for accessing NASA training opportunities and for defining individual development plans and objectives.	http://ohcm.gsfc.nasa.gov/DevGuide/Hq/hqtrngopps.htm
4	HQ Safety and Health Portal	This is a "front end" to a variety of sited dealing with human and flight safety.	http://www.hq.nasa.gov/hq/safety.htm
5	HQ Career Management Division	As a consulting and counseling resource, provides guidance, advice and consultation in the area of career management.	http://oim.hq.nasa.gov/oia/hqcmd/
6	HQ Computer Training Center (CTC)	The CTC offers training solutions in support of Headquarters core-load computer applications and special projects.	http://www.hq.nasa.gov/itcd/ctc/index.html
7	HQ Information Technology and Communications Division	The "front end" to a wide array of IT and communications information.	http://www.hq.nasa.gov/itcd/IT_orientation.html
8	NASA Awards and Recognition	This site is your first stop source for learning about NASA programs and having the basic tools for the proper execution of recognition and awards at NASA.	http://nasapeople.nasa.gov/awards/default.htm
9	NASA "CheckIn CheckOut"	Automates and consolidates the various permissions and service requests necessary for computer, phone, and account/folder access.	http://www.hq.nasa.gov/itcd/cico.html
10	NASA Agency Organization	The top level NASA Agency Organization.	http://www.nasa.gov/centers/hq/organization/index.html
11	NASA Agency Training and Development Office	This is the home page for this office. It summarizes the mission of this HQ office.	http://nasapeople.nasa.gov/training/
12	NASA Competency Management System	The Competency Management System is used to record employee skills and experience.	https://cmstool.nasa.gov/
13	NASA Federal Acquisition Regulations (FAR) Supplement (NFS)	Contains the NASA Federal Acquisition Regulations (FAR) Supplement (NFS). NASA procurement regulations, which govern NASA's broad agency announcements like AOs, CANs, and NRAs including ROSES, are found here.	http://www.hq.nasa.gov/office/procurement/regs/nfstoc.htm

	Site Name	Description	URL
14	NASA Forms	Contains a wide variety standard forms which can be downloaded as needed.	https://pollux.hq.nasa.gov/nef/user/form_search.cfm
15	NASA Freedom of Information Site	This is the "front end" to an array of FOIA information at NASA.	http://www.hq.nasa.gov/pao/FOIA/
16	NASA Headquarters	The home page for NASA Headquarters.	http://www.nasa.gov/centers/hq/home/index.html
17	NASA Home Page	The NASA home page.	http://www.nasa.gov/home/index.html
18	NASA Occupational Health Training Site	The "front end" for information and training on occupational health matters.	http://ohp.nasa.gov/training/
19	NASA Office of the Inspector General	The home page for the Office for the Inspector General.	http://www.hq.nasa.gov/office/oig/hq/
20	NASA Online Directives System (NODIS)	The repository for formally approved NASA Policy Documents (NPDs) and NASA Procedural Requirements (NPRs).	http://nodis3.gsfc.nasa.gov/
21	NASA Organizational Profile System	Home site for NASA Human Capital Management.	http://nasapeople.nasa.gov/default.htm
22	NASA Scholarship Site	The "front end" to information on NASA scholarships, including contact information.	http://nasapeople.nasa.gov/nasascholarship/index.htm
23	NASA Shared Services Center	NSSC is a central site that provides a wide array of financial and administrative services to NASA employees.	http://www.nssc.nasa.gov/
24	NASA Solicitation and Proposal Integrated Review and Evaluation System (NSPIRES)	NSPIRES provides information about NASA research announcements, proposals selected for closed solicitations, and results of NASA research.	http://nspires.nasaprs.com/external/
25	NASA Workforce Services	A NSSC portal dedicated to providing a wide array of capabilities oriented toward "human capital" (personnel) matters.	https://hcie.nasa.gov
26	New Employee Orientation for NASA HQ	The 'front end" to a wealth of information for new employees.	http://employeeorientation.nasa.gov/hqs/
27	NRC Action Tracking System	Track actions regarding activities with the Nuclear Regulatory Commission.	Available after login to Scienceworks (see item "31")
28	Office of Safety and Mission Assurance	This is the home page for the Office of Safety and Mission assurance (S&MA).	http://www.hq.nasa.gov/office/codeq/
29	RAPTOR	A tool for tracking Research and Analysis Program resources.	Available after login to Scienceworks (see item "31")
30	Science at NASA	This is the home page for the Science Mission Directorate.	http://science.hq.nasa.gov/
31	Science Works	Used for accessing SMD mission and financial management systems.	https://scienceworks.hq.nasa.gov
32	Senior Advisor for Research & Analysis (a SMD site)	Contains information related to NASA's Science Research Programs, including Astrophysics, Planetary Science, Heliophysics and Earth Science.	http://science.hq.nasa.gov/research/sara.html
33	Senior Executive Service (SES) General Information	SES Job Information ▪ How to apply ▪ Qualification Guide ▪ Vacancies ▪ AND MORE	http://nasapeople.nasa.gov/ses/index.htm
34	SMD Interagency Agreements Database	Contains pending and current between NASA SMD and other Agencies.	Available after login to Scienceworks (see item "31")
35	SMD International Agreements Database	Contains pending and current between NASA SMD and foreign entities.	Available after login to Scienceworks (see item "31")

	Site Name	Description	URL
36	SMD Milestones Database	Contains important milestones for SMD mission activity.	Available after login to Scienceworks (see item "31") or directly at: https://ossim.hq.nasa.gov/milestones/
37	SMD Monthly Program Reviews	Provides a structure for receiving reports from Centers, and for their use in SMD monthly reviews.	Available after login to Scienceworks (see item "31") or directly at: http://ossim.hq.nasa.gov/sprogrev/
38	SMD Requirements Management System	Tracks Level 1 Requirements and other key information for SMD's programs and projects.	Available after login to Scienceworks (see item "31") or directly at: http://ossim.hq.nasa.gov/smdrms/home.htm
39	SMD Weekly Reporting System	Provides a structure for receiving weekly SMD project status reports, and for using them for HQ weekly reporting.	Available after login to Scienceworks (see item "31") or directly at http://ossim.hq.nasa.gov/ossim/home.htm
40	System for Administration, Training, and Educational Resources for NASA (SATERN)	SATERN is used to request, approve, and manage training.	https://satern.nasa.gov/elms/learner/login.jsp
41	Travel Manager	Used for booking travel, and for reporting travel expenses.	https://nasatravel.ifmp.nasa.gov/
42	WebTads	Used for submitting hours worked, annual leave, sick time, et cetera.	https://webtads.nasa.gov/1000

APPENDIX F. GLOSSARY OF ACRONYMS

AA	Associate Administrator
AAA	Assistant Associate Administrator
AAA/SPI	Associate Administrator for Strategy, Policy, and International
AO	Announcements of Opportunity
AOR	Authorized Organizational Representative
APD	Astrophysics Division
APG	Annual Performance Goal
ASP	Acquisition Strategy Planning
ATP	Authorization to Proceed
BPR	Baseline Performance Review
CA	Corrective Action
CADRe	Cost Analysis Data Requirement
CAN	Cooperative Agreement Notice
CCSP	Climate Change Science Program
CCTP	Climate Change Technology Program
CDB	Congressional Database
CDR	Critical Design Review
CENR	Committee on Environment and Natural Resources
CFO	Chief Financial Officer
CMC	Center Management Councils
CoFR	Certificate of Flight Readiness
Co-I	Co-Investigator
COS	Chief of Staff
COTR	Contracting Officer's Technical Representative
CR	Confirmation Review
CS	Chief Scientist

CSR	Concept Study Report
DAA	Deputy Associate Administrator
DAA/P	Deputy Associate Administrator for Programs
DCS	Deputy Chief Scientist
DCS/ES	Deputy Chief Scientist for Earth Science
DCS/SS	Deputy Chief Scientist for Space Science
DD	Division Director
DFMS	Direct Financial Management System
DLC	Directorate Lead Counsel
DOS	Department of State
DPMC	Directorate Program Management Council
DSN	Deep Space Network
E/PO	Education and Public Outreach
EA	Environmental Assessment
ECC	Education Coordination Committee
EIS	Environmental Impact Statement
ELV	Expendable Launch Vehicles
EOP	Executive Office of the President
EPCS	The Employee Performance Communication System
ESD	Earth Science Division
ESMD	Exploration Systems Mission Directorate
ESSP	Earth System Science Pathfinder
FAD	Formulation Authorization Document
FBO	Federal Business Opportunities
FMR	Financial Management Requirement
FOIA	Freedom of Information Act
FPPS	Federal Personnel Payroll System

GAO	General Accounting Office
GEO	Group on Earth Observations
GN	Ground Network
GPRA	Government Performance and Results Act
GSFC	Goddard Space Flight Center
H&S	Health and Safety
HATS	Headquarters Action Tracking System
HGAO	Headquarters Grants Administration Office
HONURS	Headquarters ODIN (Outsourcing Desktop Initiative) New User Request System
HPD	Heliophysics Division
HQ	Headquarters
HRMD	Human Resource Management Division
HST	Hubble Space Telescope
IA	Implementation Agreement
IAT	Interagency Transfer
IBPD	Integrated Budget and Performance Document
ICE	Independent Cost Estimate
IDP	Individual Development Plan
IEMP	Integrated Enterprise Management Program
IG	Inspector General
IGA	Inter-Governmental Agreement
IPA	Intergovernmental Personnel Agreement
IPAO	Independent Program Assessment Office
IRB	Independent Review Board
IT	Information Technology
JPL	Jet Propulsion Laboratory
KDP	Key Decision Point

LaRC	Langley Research Center
LOA	Letter of Agreement
MDAA	Mission Directorate Associate Administrator
MDCE	Science Mission Directorate Chief Engineer
MDM	Metadata Manager
MDR	Mission Definition Review
MO&DA	Mission Operations and Data Analysis
MOA	Memorandum of Agreement
MOU	Memorandum of Understanding
MPD	Management and Policy Division
MRB	Mission Readiness Briefing
MRR	Mission Readiness Review
NAC	NASA Advisory Council
NAR	Non-Advocate Review
NATS	National Research Council Activity Tracking System
NCR	Nonconformance Report
NEO	Near Earth Object
NEPA	National Environmental Planning Act
NESSF	NASA Earth and Space Science Fellowship
NMP	New Millennium Program
NODIS	NASA Online Directives Information Systems
NOIs	Notices of Intent
NPD	NASA Policy Directive
NPP	NASA Postdoctoral Program
NPR	NASA Procedural Requirement
NRA	NASA Research Announcement
NRC	National Research Council

NRESS	NASA Research and Education Support Services
NSPIRES	NASA Solicitation and Proposal Integrated Review and Evaluation System
NSSC	NASA Shared Services Center
NSTC	National Science and Technology Council
OCE	Office of the Chief Engineer
ODIN	Outsourcing Desktop Initiative
OE	Office of Education
OER	Office of External Relations
OPM	Office of Personnel Management
OGC	Office of General Counsel
OLIA	Office of Legislative and Intergovernmental Affairs
OMB	Office of Management and Budget
OP	Office of Procurement
OPA	Office of Public Affairs
ORS	Open Review System
OSMA	Office of Safety and Mission Assurance
OSTP	Office of Science and Technology Policy
P&AB	Program and Administrative Branch
PA	Program Analyst
PA&E	Program Analysis and Evaluation
PAL	Project Authorization Letter
PCA	Program Commitment Agreement
PD	Position Description
PDL	Program Delegation Letter
PDR	Preliminary Design Review
PE	Program Executive
PI	Principal Investigator

PIR	Program Implementation Review
PLAR	Post-Launch Assessment Review
PLRA	Program-Level Requirements Appendix
PMC	Program Management Councils
PNAR	Preliminary Non-Advocate Review
PPBE	Planning, Programming, Budgeting, and Execution
PS	Program Scientist
PSD	Planetary Science Division
R&A	Research and Analysis
R&D	Research and Development
R&T	Research and Technology
RAPTOR	Research and Analysis Program Tracking of Resources
RM	Risk Management
RMS	Requirements Management System
ROSES	Research Opportunities in Space and Earth Sciences
RTOP	Research and Technology Objectives and Plans
SAAM	Space Act Agreement Maker
SANEOE	Special Assistant for Near Earth Objects and Exploration
SAR	Safety Analysis Report
SARA	Senior Adviser for Research and Analysis
SASPE	Senior Adviser for Science Process and Ethics
SATERN	System for Administration, Training, and Educational Resources
SBIR	Small Business Innovation Research
SES	Senior Executive Service
SF	Standard Form
SIERA	System for International and Interagency External Relations Agreements
SMA	Safety and Mission Assurance

SMaC	Science Management Council
SMD	Science Mission Directorate
SME	Subject Matter Expert
SMO	Systems Management Office
SMSR	Safety and Mission Success Review
SOMD	Space Operations Mission Directorate
SPD	Science Policy Directive
SPIAD	Science Pending International Agreements Database
SR&T	Supporting Research and Technology
SRB	Standing Review Board
SRR	Systems Requirements Review
SSO	Science Support Office
STDT	Science and Technology Definition Team
STEM	Science, Technology, Engineering, and Mathematics
TDRSS	Tracking and Data Relay Satellite System
TMC	Technical, Management, and Cost
TMCO	Technical, Management, Cost, and Other Factors
ToR	Terms of Reference
TRL	Technology Readiness Level
TRP	Technical Requirements Package
TT&C	Telemetry, Tracking, and Commanding
VSE	Vision for Space Exploration
WBS	Work Breakdown Structure